City of ROLLA

BUILDING *in the* CITY OF ROLLA

YOUR GUIDE TO CONSTRUCTION AND THE PERMIT PROCESS

901 N. ELM ST.
ROLLA, MO 65401

PHONE: (573) 364 - 5333
FAX: (573) 426 - 6978
www.rollacity.gov/comdev

CITY OF ROLLA: COMMUNITY DEVELOPMENT

GENERAL INFORMATION

STAFF:

Dawn Bell – Community Development Director

Tom Coots – City Planner

Cindy Brown – Community Development Specialist

Brian Turner- Chief Building Inspector

Skyler Johnson – Building Inspector

Dawson Conway - Zoning/Codes Inspector

Phone: (573) 364-5333

Fax: (573) 426-6978

CURRENT CODES OBSERVED:

2018 ICC International Building Code
2018 ICC International Residential Code
2018 ICC International Mechanical Code
2018 ICC International Plumbing Code
2018 ICC International Fire Code
2000 ICC Energy Code
2017 National Electrical Code as referenced in the ICC Electrical Code
2018 ICC International Property Maintenance Code

City of Rolla Code

GENERAL

1. A permit is required to construct, alter, repair, move, demolish, or to change the type of occupancy of a building or structure, or to erect, install, enlarge, alter, repair, remove, convert or replace any electrical, gas, mechanical or plumbing system, the installation of which is regulated by the appropriate Code or Ordinances of the City of Rolla. Portable storage buildings under 200 sq. ft., fences, and other items as listed exempt in the appropriate Code do not require a permit.

2. Construction documents must be submitted with a completed permit application and approved prior to a permit being issued.

3. Permits for construction shall be issued only if all other regulations and zoning restrictions are complied with as required by the City of Rolla Code.

4. An elevation certificate will be required for construction in a floodplain at the time of permit application.

5. Excavation permits are required for all excavation in the City right-of-way.

6. All commercial projects shall be reviewed for storm water issues by Public Works prior to issuing a permit. Any development requiring more than 1 acre will also require a land disturbance permit. For more information, please contact the *Public Works Department*.

7. Construction may not commence until all permits have been issued.

8. Permit holders are responsible for obtaining all required inspections.
Please call (573) 364-5333 for inspections. A two-hour minimum notice is requested to ensure proper inspection coordination.

9. All contractors and/or subcontractors are required to obtain a City of Rolla Business License prior to performing any work.

Please contact the Finance Department for further information at (573) 426-6983.

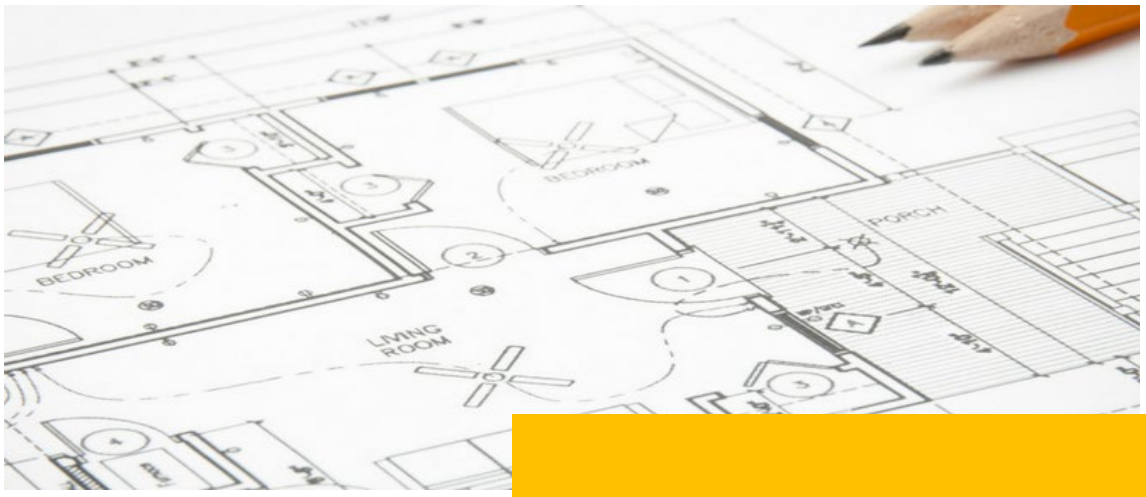

WHAT IS NEEDED TO OBTAIN A BUILDING PERMIT:

*Completed building permit application (see application and guides page)

Note: Application *must* be signed and dated to be processed. You *must* list a contractor. If you are completing the work yourself, please write **SAME AS OWNER** in the space provided for contractor information.

REQUIRED PLANS:

Residential: 1 Complete Set or 1 PDF of the following:

Commercial: 1 PDF of the following:

*Site Plan: An outline of your property showing all property lines with dimensions. Also provide building location on your property with the dimensions of building footprint and dimensions from building to property line.

*Electrical & Mechanical Spec. Sheet: Fill out the application. (See application page)

*Footing and Foundation Plan: Showing footing & foundation of building and also beam & pier location, size and spacing.

*Floor Plan: Label all rooms and include dimensions of all rooms, doors and windows. Show window locations, as well as kitchen and bath layout.

*Wall Section: Show typical section from footing through roof and label all materials used and spacing.

*Elevation: Show (at least) a front and right side view of home. All four sides is preferred.

Note: Our current codes are adopted under the 2018 IBC Building Codes.

Note: All commercial plans are required to be signed and sealed by a State of Missouri Registered Architect and/or a Registered Engineer. Commercial plans will also require civil, plumbing, electrical, mechanical and structural plans as well as material specifications, to be submitted.

* An elevation certificate is required for construction taking place in a floodplain. An excavation deposit will be required for all excavation jobs taking place in the City right-of-way.

* Proof of ownership or notarized permission letter from the current owner will be required for construction on all newly purchased property that has not yet been recorded with the Phelps County Recorder of Deeds.

* A copy of the manufacturer's installation instructions is required to be provided for all prefabricated fireplaces.

* Sign permit applications for attached signs must be accompanied by an elevation view of the building with sign location and dimensions shown as well as the dimensions of the building fronting on a street. Complete plans, including a site plan showing all other detached signs on the property, must be provided for all detached signs. Detached signs over 10 ft. in height are required to be designed by a State of Missouri Registered Engineer.

* Manufacturer's installation instructions are required to be provided for all pre-manufactured swimming pools, hot tubs, or spas. A site plan showing the location of the pool with dimensions is also required for pool permits.

*Mobile or manufactured home permit applications require the submittal of the manufacturer's instructions, set-up shall be in accordance with the Missouri Public Service Commission regulations pertaining to manufactured housing.

*All suspended slabs are required to be designed by a State of Missouri Registered Engineer.

THE REVIEW PROCESS:

The City of Rolla reviews applications on a first-come, first serve basis. However, we are committed to processing your permit as quickly and efficiently as possible.

After your application is submitted, we will begin the review process. Depending on the extent and type of project, you may need the services of a licensed professional. State law may require that a licensed architect or engineer prepare a portion, or your entire project. If you are unsure if these services are necessary for your project, please contact *Chief Building Inspector*, Brian Turner, for more information.

Depending on the nature of the project, this could involve several departments. Community Development will determine compliance with building and plumbing. If your plans cannot be accepted, we will provide you with lists of necessary corrections needed in order to complete your project.

WHAT HAPPENS WHEN THE PERMIT IS ISSUED:

After all departments have reviewed your plans and determine that their contents satisfy all code requirements, you will be notified of the approval of your permit. You will need to conduct payment and sign for your permit using one of the following methods:
*Electronically: Once your permit has been issued, you may opt to sign and pay for your permit electronically. Payments may be taken over the phone with credit card. Signed copies of permits need to be scanned and emailed to comdev@rollacity.gov, or faxed to (573) 426-6978.

*By Mail: If you are out of town or prefer to send your building permit documents through the mail, please ask for a copy of your permit to by sent either through email for you to print and sign, or through mail and return to:

The City of Rolla
Community Development
901 North Elm Street
Rolla, MO 65401

*In Person: You may visit the 2nd Floor of Rolla City Hall to sign for your permit at the Community Development Department. You may pay for your permit with cash, check, or credit card, if you haven't already paid prior to pick-up. Rolla City Hall is located at 901 N. Elm Street, Rolla, MO.

ONCE YOUR PERMIT HAS BEEN ISSUED, YOU ARE RESPONISBLE FOR COMPLETING THE FOLLOWING STEPS:

* PAY FOR PERMIT
* SIGN PERMIT
* OBTAIN PERMIT
*SCHEDULE INSPECTION

THE PAYMENT PROCESS:

Construction may not commence until your permit has been issued, signed and paid for.

To complete the payment process over the phone, you may call (573) 426-6985 to give credit card payment. A virtual copy of your receipt will be emailed to you, or sent via USPS.

To complete payment in person, please visit the 2nd Floor of Rolla City Hall, located at 901 N. Elm Street. We will happily take payment for you, collect required signatures, and issue your permit over the counter. We accept credit card, cash, or check as form of payment. Some residents prefer this method because our staff is available to assist you and answer any questions you may have before beginning your project.

Depending on the nature of your permit, collection of a deposit may be required.
Residential projects: $200
Commercial projects: $500
Your deposit will be included in the total fees of your Building Permit. Once all required inspections have been completed, the deposit will be returned to you in full. Should the permit expire or final inspection not be obtained and approved within its time frame, the deposit shall be forfeited.

THE INSPECTION SCHEDULING PROCESS:

As your work progresses, our building inspectors will conduct routine inspections. Permit holders are responsible for obtaining all required inspections. Do not proceed with any further work until the required inspections have been conducted and approved.

Please contact Community Development to schedule an inspection:
Phone: (573) 364-5333
Email: comdev@rollacity.gov

Please allow a two-hour minimum notice for scheduling to ensure proper inspection coordination.
If you do not receive a response to your email or message within two hours, please call (573) 365-5333 and press “2” so available staff can help you reserve a spot for an inspection that same day.

WHAT INSPECTIONS ARE REQUIRED?

Below are some examples of the required inspections associated with the building permit process and when to call to schedule for them:

Footing: Once excavation and footing forming is complete and prior to any placement of concrete.

Under-slab Plumbing: After all building drain piping and water piping (if applicable) is complete and the required pressure test is on.

Rough Framing, Electrical, Mechanical, and Plumbing: Once all work is complete, required pressure test is on, and prior to placement of any insulation or drywall.

Electric Service or Temp. Electric Service: After meter base, panel, or disconnect, mast or underground conduit and/or wiring is installed and ready to energize. Burial depths for underground services must be inspected prior to backfilling.

Sewer or Water Connection: This inspection is made once all piping is installed and prior to backfilling.

Dry Wall Inspection: This inspection should be made after all dry wall is hung and prior to taping and painting.

Occupancy: Required prior to occupying building or structure.

Final Inspection: Whenever all construction, final grading, testing, or other unfinished items are completed and the building is finished, you may schedule for a final inspection to complete the permitting process. If your permit required a deposit at time of payment, your deposit will only be returned once the final inspection has been conducted and a building inspector confirms that your project is approved under a valid permit.

Demolition: Once utilities have been disconnected, an inspection is required before proceeding with demolition of the structure. After the demolition is complete, another inspection is required to make sure sewer connection has been capped and final grading is complete.

Note: The disposal of demolition waste is regulated by the Missouri Department of Natural Resources under Chapter 260, RSMo. Demolition waste must be disposed of in accordance with this statute. Please contact the DNR (573) 751-4817 in regards to any possible hazardous waste and disposal. An inspection for asbestos containing materials is required prior to renovation or demolition activities in all commercial, institutional, or industrial buildings.

ELECTRONIC PLAN REVIEW EXPLAINED:

The City of Rolla is now offering Electronic Plan Review. This process allows our residents to communicate with our staff and complete each step of the permitting process virtually, from the initial application stage to the final approved plan sets.

Electronic plan review is beneficial because it reduces the number of physical trips necessary to drop off plans and applications, complete the payment process, and pick-up issued permits. EPR also reduces the printing of hard copies of plans, and potentially can improve plan review turnaround time.

To start the electronic plan review process, please provide clear, electronic PDF files containing your plans and related documents, along with a complete Building Permit Application, and email to comdev@rollacity.gov.

Your electronic plans will be distributed to necessary staff members in the Community Development Department for review.

Your plans will be stamped and signed by our Building Codes Administrator and returned to you by email. Once your plans have been accepted and your building permit is issued, you may call (573) 426-6985 to conduct credit card payment over the phone.

Once credit card payment has been collected, you will receive a virtual copy of your receipt for your records. During the virtual permitting process, you will also receive an electronic copy of your permit. You must sign, date and return this permit in order for your permit to be valid and filed into our GOVQA electronic filing system.

Four ways to sign and send your permit to our department:

Sign electronically through Adobe Reader, and email to: comdev@rollacity.gov

Print the permit, sign, and scan permit to your computer. You may email the scanned document to comdev@rollacity.gov

Print, sign and fax the copy of your signed permit to:
Fax: (573) 426-6978

Request physical permit be mailed to you *or* print a copy of the permit and sign and return through mail to:
PO BOX 979, Rolla, MO 65402

ADOPTED CODE AMENDMENTS:

INTERNATIONAL BUILDING CODE

101.1 Title is hearby amended by inserting the words “City of Rolla, Missouri.”

105.2 Work exempt from permit: Change the following:

Building:

1. One-story detached accessory structures used as tool and storage sheds, playhouses and similar
uses, provided that the floor area is not greater than 200 square feet.

7. Roof covering, siding, painting, papering, tiling, carpeting, cabinets, countertops, and similar finish
work.

105.5 Expiration: Every permit issued shall be valid for one year after issuance unless work authorized
by the permit is not commenced within 180 days after its issuance, or if the authorized work is
suspended or abandoned for a period of 180 days after the time the work is commenced. At that time
the permit would become void and re-application would need to be made. A one-time, one-year
extension of a valid permit may be obtained at the cost of one half of the original permit fee.

THE ROLLA COMMUNITY DEVLOPMENT DEPARTMENT PRESENTS OUR NEW:

BUILDING PERMIT FEE SCHEDULE

2018 SQUARE FOOT CONSTRUCTION COSTS

Group (2018 International Building Code)	IA	IB	IIA	IIB	IIIA	IIIB	IV	VA	VB
A-1 Assembly, theaters, with stage	239.41	231.54	226.03	216.67	203.74	197.86	209.82	186.11	179.13
A-1 Assembly, theaters, without stage	219.07	211.20	205.68	196.33	183.65	177.76	189.48	166.01	159.03
A-2 Assembly, nightclubs	188.23	182.77	178.14	170.93	161.13	156.68	164.92	145.88	140.94
A-2 Assembly, restaurants, bars, banquet halls	187.23	181.77	176.14	169.93	159.13	155.68	163.92	143.88	139.94
A-3 Assembly, churches	220.05	212.18	206.66	197.31	185.99	180.11	190.46	168.36	161.38
A-3 Assembly, general, community halls, libraries, museums	185.05	177.18	170.67	162.31	148.58	143.75	155.46	131.00	125.02
A-4 Assembly, arenas	218.07	210.20	203.68	195.33	181.65	176.76	188.48	164.01	158.03
B Business	192.02	185.04	179.30	170.56	155.93	150.11	164.01	137.00	131.05
E Educational	197.52	190.73	185.77	177.32	165.32	156.97	171.23	144.39	140.26
F-1 Factory and industrial, moderate hazard	114.08	108.82	102.59	98.59	88.51	84.45	94.44	74.21	69.43
F-2 Factory and industrial, low hazard	113.08	107.82	102.59	97.59	88.51	83.45	93.44	74.21	68.43
H-1 High Hazard, explosives	106.73	101.48	96.25	91.25	82.38	77.32	87.10	68.08	N.P.
H234 High Hazard	106.73	101.48	96.25	91.25	82.38	77.32	87.10	68.08	62.30
H-5 HPM	192.02	185.04	179.30	170.56	155.93	150.11	164.01	137.00	131.05
I-1 Institutional, supervised environment	191.30	184.81	179.46	171.90	158.36	154.06	171.99	141.86	137.45
I-2 Institutional, hospitals	321.25	314.27	308.52	299.78	284.17	N.P.	293.24	265.24	N.P.
I-2 Institutional, nursing homes	222.99	216.01	210.27	201.52	187.89	N.P.	194.98	168.96	N.P.
I-3 Institutional, restrained	218.28	211.30	205.55	196.81	183.43	176.62	190.27	164.50	156.55
I-4 Institutional, day care facilities	191.30	184.81	179.46	171.90	158.36	154.06	171.99	141.86	137.45
M Mercantile	140.27	134.81	129.18	122.96	112.68	109.23	116.95	97.44	93.50
R-1 Residential, hotels	193.08	186.60	181.24	173.68	159.89	155.58	173.77	143.39	138.97
R-2 Residential, multiple family	161.95	155.46	150.10	142.54	129.52	125.22	142.64	113.02	108.61
R-3 Residential, one- and two-family [d]	151.10	146.99	143.20	139.61	134.50	130.95	137.27	125.85	118.45
R-4 Residential, care/assisted living facilities	191.30	184.81	179.46	171.90	158.36	154.06	171.99	141.86	137.45
S-1 Storage, moderate hazard	105.73	100.48	94.25	90.25	80.38	76.32	86.10	66.08	61.30
S-2 Storage, low hazard	104.73	99.48	94.25	89.25	80.38	75.32	85.10	66.08	60.30
U Utility, miscellaneous	83.66	79.00	74.06	70.37	63.47	59.32	67.24	50.19	47.80

a. Private Garages use Utility, miscellaneous
b. For shell only buildings deduct 20 percent
c. N.P. = not permitted
d. Unfinished basements (Group R-3) = $21.00 per sq. ft.

CURRENT IBC PERMIT FEE SCHEDULE

(gross area x construction value x modifier = permit fee)

GROSS AREA x CONSTRUCTION VALUE x .0033 = PERMIT FEE

Flat Rate Fee Schedule

Portable Storage Building> 200 SF	$90			
Portable Carport	$90			
Deck, Porch or Stairs	$90	Residential	$170	Commercial
Electric Service	$90	Residential	$170	Commercial
Mechanical, Electric, Plumbing Work	$90	Residential	$170	Commercial
Pool or Spa (Residential)	$90	Above-ground	$250	In-ground
Pool or Spa (Commercial)			$500	
Mobile Home			$225	
Alterations, < 500 SF	$90	Residential	$170	Commercial
Alterations, 501 - 1499 SF	$170	Residential	$350	Commercial
Alterations, 1500 SF and larger	$325	Residential	$650	Commercial
Signs, 50 SF and under			$150	
Signs over 50 SF			$300	
Communication Tower			$1,000	
Demolition	$150	Residential (+ $200 Deposit)	$200	Commercial (+ $500 Deposit
Excavation	$750			

Sewer connection and/or tapping fees and excavation deposit will remain unchanged

When construction has commenced without a permit, the permit fee shall be twice the original amount to cover the additional inspections and the time necessary to insure compliance with the code. When construction has begun under the authorization of a permit, but the permit holder has failed to obtain the required inspection, and the construction has passed the stage in which the inspection can be reasonably done, then an additional 25% of the original permit fee ($25 minimum) will be charged. A $200 deposit will be required on all residential permits and a $500 deposit will be required on all commercial construction permits with estimated construction costs greater than $2,500. This deposit shall be refunded after final inspection has been approved under a valid and current permit and the Public Works Department has approved all work and the condition of the right-of-way. Should the permit expire or final inspection not be obtained and approved within this time frame, the deposit will be forfeited.

114.4 VIOLATION PENALITES

Any person who shall violate a provision of this code or shall fail to comply with any of the requirements thereof or who shall erect, construct, alter, or repair a building or structure in violation of an approved plan or directive of the code official, or of a permit or certificate issued under the provisions of this code, shall be guilty of a misdemeanor, punishable by a fine.

115.3 UNLAWFUL CONTINUANCE

Any person who shall continue work in or about the structure after having been served with a stop work order, except such work as that person is directed to perform to remove a violation or unsafe conditions, shall be liable to a fine of not less than $50.00 or more than $500.00.

903.2.8.1 EXCEPTIONS:

a) An automatic sprinkler system shall not be required in Group R as adopted by Missouri State Statute 67.281 "Any governing body of any political subdivision that adopts the 2009 International Residential Code for One and Two-Family Dwellings or a subsequent edition of such code without mandated automatic fire sprinkler systems in Section R313 of such code shall retain the language in section R317 of the 2006 International Residential Code for two-family dwellings (R317.1) and townhouses (R317.2)."

b) An automatic sprinkler system shall not be required in Group R when the habitable space is less than 3,750 sq. ft. for a three-unit multiple family home (Three-Plex), or less than 5,000 sq. ft. for a four unit multiple family home (Four-Plex) and no more than one story above grade. Each individual apartment must be constructed with a 1-hour fire separation between individual units and all garage areas must be protected by a one hour fire separation.

INTERNATIONAL MECHANICAL CODE

101.1 Title is hereby amended by inserting the words “City of Rolla, Missouri.”

106.4.3 Expiration: Every permit issued shall be valid for one year after issuance unless work authorized by the permit is not commenced in 180 days after its issuance, or if the authorized work is suspended or abandoned for a period of 180 days after the time the work is commenced. At the time the permit would become void and re-application would need to be made. A one-time, one-year, extension of a valid permit may be obtained at the cost of one half of the original permit fee.

106.5.2. Fee Schedule: Refer to the fee schedule provided in Section 108.7 of the International Building Code.

108.4 Violation Penalties: Any person who shall violate a provision of this code or shall fail to comply with any of the requirements thereof or who shall erect, construct, alter, or repair a building or structure in violation of an approved plan or directive of the code official, or of a permit or certificate issued under the provisions of this code, shall be guilty of a Misdemeanor, punishable by a fine of not more than $500.00, or by imprisonment not exceeding 90 days; or both such fine and imprisonment. Each day that a violation continues after due notice has been served shall be deemed a separate offense.

108.5 Unlawful Continuance: Any person who shall continue any work in or about the structure after having been served with a stop work order, except such work as that person is directed to perform to remove a violation or unsafe conditions, shall be liable to a fine of not less than $50.00 or more than $500.00.

INTERNATIONAL PLUMBING CODE

101.1 Title is hereby amended by inserting the words “City of Rolla, Missouri.”

106.6.3 Every permit issued shall be valid for one year after issuance unless work authorized by the permit is not commenced in 180 days after its issuance, or if the authorized work is suspended or abandoned for a period of 180 days after the time the work is commenced. At the time the permit would become void and re-application would need to be made. A one-time, one-year, extension of a valid permit may be obtained at the cost of one half of the original permit fee.

106.6.2. Fee Schedule: Refer to the fee schedule provided in Section 108.7 of the International Building Code.

108.4 Violation Penalties: Any person who shall violate a provision of this code or shall fail to comply with any of the requirements thereof or who shall erect, construct, alter, or repair a building or structure in violation of an approved plan or directive of the code official, or of a permit or certificate issued under the provisions of this code, shall be guilty of a Misdemeanor, punishable by a fine of not more than $500.00, or by imprisonment not exceeding 90 days; or both such fine and imprisonment. Each day that a violation continues after due notice has been served shall be deemed a separate offense.

108.6 Unlawful Continuance: Any person who shall continue any work in or about the structure after having been served with a stop work order, except such work as that person is directed to perform to remove a violation or unsafe conditions, shall be liable to a fine of not less than $50.00 or more than $500.00.

903.1 Roof Extension: Insert the number 12 inches.

918.1 Air Admittance Valves: Air admittance valves shall only be allowed in remodel or modification of the existing plumbing system when the vent cannot connect into the existing vent system or terminate to the outside.

INTERNATIONAL RESIDENTIAL CODE

R101-1 Title: is hereby amended by inserting the words "City of Rolla, Missouri".

R105.2 Work Exempt from Permit Building:
6. Roof covering, siding, painting, paper, tiling, carpeting, cabinets, countertops, and similar finish work.

R105.5 Expiration: Every permit issued shall be valid for one year after issuance unless work authorized by the permit is not commenced in 180 days after its issuance, or if the authorized work is suspended or abandoned for a period of 180 days after the time the work is commenced. At the time the permit would become void and re-application would need to be made. A one-time, one-year, extension of a valid permit may be obtained at the cost of one half of the original permit fee.

R108.2 Fee Schedule: Refer to the fee schedule provided in Section 108.7 of the International Building Code.

R113.4 Violation Penalties: Any person who shall violate a provision of this code or shall to comply with any of the requirements thereof or who shall erect, construct, alter, or repair a building structure in violation of an approved plan or directive of the code official, or of a permit or certificate issued under the provisions of this code, shall be guilty of a misdemeanor, punishable by a fine of not more than $500.00, or by imprisonment not exceeding 90 days; or both such fine and imprisonment. Each day that a violation continues after due notice has been served shall be deemed a separate offense.

R114.2 Unlawful Continuance: Any person who shall continue any work in or about the structure after having been served with a stop work order, except such work as that person is directed to perform to remove a violation or unsafe conditions, shall be liable to a fine of not less than $50.00 or more than $500.00.

R317.1 Location Required: Change the following: 2. All sills or plates that rest on concrete or masonry.

R318.2 Chemical Soil Treatment: The concentration, rate of application, and treatment method of the termiticide shall be consistent with and never less than the termiticide label. When chemical protection against termites is used, a certificate, or proof of treatment from a licensed exterminator will be required.

R502.3.1. Sleeping Areas and Attic Joist: Delete.

G2432 Log Lighters: Delete and replace with "Not allowed"

P2805.1 WATER HEATER SIZING CHART: 1995 CABO.

P2804.1 Water Heater Sizing Chart

FUEL		GAS	ELECT	OIL	GAS	ELECT	OIL	GAS	ELECT	OIL	GAS	ELECT	OIL
Number of Bedrooms			1			2			3			-	
1 to 1½ Baths	Storage (gal)	20	20	30	30	30	30	30	40	30	-	-	-
	Input (Btu/h or kw)	27K	2.5	70K	36K	3.5	70K	36K	4.5	70K	-	-	-
	Draw (gph)	43	30	89	60	44	89	60	58	89	-	-	-
	Recovery (gph)	23	10	59	30	14	59	30	18	59	-	-	-
Number of Bedrooms			2			3			4			5	
2 to 2½ Baths	Storage (gal)	30	40	30	40	50	30	40	50	30	50	66	30
	Input (Btu/h or kw)	36K	4.5	70K	36K	5.5	70K	38K	5.5	70K	47K	5.5	70K
	Draw (gph)	60	58	89	70	72	89	72	72	89	90	88	89
	Recovery (gph)	30	18	59	30	22	59	32	22	59	40	22	59
Number of Bedrooms			3			4			5			6	
3 to 3½ Baths	Storage (gal)	40	50	30	50	66	30	50	66	30	50	80	40
	Input (Btu/h or kw)	38K	5.5	70K	38K	5.5	70K	47K	5.5	70K	50K	5.5	70K
	Draw (gph)	72	72	89	82	88	89	90	88	89	92	102	99
	Recovery (gph)	32	22	59	32	22	59	40	22	59	42	22	59

For SI: 1 gallon = 3.785 L, 1 gallon per hour = 1.05 mL/s, 1 Btu/h = 0.2931 W, °F. = 1.8°C. + 32.

NOTE: Storage capacity, input and the recovery requirements indicated in the table are typical and may vary with each individual manufacturer. Any combinations of these requirements to produce the 1-hour draw stated will be satisfactory. Recovery is based on 100°F. Water temperature rise.

P3102.1 Required Vent Extension: Every building shall have a main vent a minimum of 3 inches in diameter that is either a vent stack or stack vent. Such vent shall run undiminished in size and as directly as possible from the building dram through to the open air above the roof. All other vent extensions to the outside shall be not less than 2 inches in diameter.

P3103.1 Roof Extensions: All open vent pipes which extend through a roof shall be terminated at least 12 inches above the upslope side of the penetration except that where a roof is to be used for any purpose other than weather protection, the vent extension shall be run at least 7 feet above the roof.

P3114.3 Where Permitted: Air admittance valves shall only be allowed in remodel or modification of the existing plumbing system when the vent cannot connect into the existing vent system or terminate to the outside.

ICC ELECTRICAL CODE

*101.1 Title is hereby amended by inserting the word “City of Rolla, Missouri”.

403.2 Expiration: Every permit issued shall be valid for one year after its issuance unless work authorized by the permit is not commenced within 180 days after its issuance, or if the authorized work is suspended or abandoned for a period of 180 days after the time the work is commenced. At that time the permit would become void and re-application would need to be made. A one-time, one-year extension of a valid permit may be obtained at the cost of one half of the original permit fee.

404.2 Fee Schedule: Refer to fee schedule provided in Section 108.7 of the International Building Code.

1003.1 Penalties: Any person who shall violate a provision of this code or shall fail to comply with any of the requirements thereof or who shall erect, construct, alter, or repair a building or structure in violation of an approved plan or directive of the code official, or of a code, shall be guilty of a misdemeanor, punishable by a fine of not more than $500.00, or by imprisonment not exceeding 90 days; or both such fine and imprisonments. Each day that a violation continues after due notice has been served shall be deemed a separate offense.

1004.3 Unlawful Continuance: Any person who shall continue any work in or about the structure after having been served with a stop work order, except such work as that person is directed to perform to remove a violation or unsafe conditions, shall be liable to a fine of no less than $50.00 or more than $500.00.

City of Rolla Code:

Sec. 10-22 Service Connections:
All exposed conduits to the Utility Company’s supply side of the meter base shall be rigid heavy-wall steel.

Sec. 10-23 Ground Wire Required: All electrical systems in any structure within the city shall have an independent ground wire installed with such electrical system; and copper twelve (12) gauge shall be the minimum wire size for branch circuit receptacle outlets. Fourteen (14) gauge copper wire shall be allowed for residential fifteen amp lighting circuits.

INTERNATIONAL FIRE CODE:

101.1 Title is hereby amended by inserting the words "City of Rolla, Missouri"

105.3.1 Expiration: Every permit issued shall be valid for one year after its issuance unless work authorized by the permit is not commenced within 180 days after its issuance, or if the authorized work is suspended or abandoned for a period of 180 days after the time the work is commenced. At that time the permit would become void and re-application would need to be made. A one-time, one-year, extension of a valid permit may be obtained at the cost of one half of the original permit fee.

106.4 Fee Schedule: Refer to fee schedule provided in Section 108.7 of the International Building Code.

109.3 Violation Penalties: Any person who shall violate a provision of this code or shall fail to comply with any of the requirements thereof or who shall erect, construct, alter, or repair a building or structure in violation of an approved plan or directive of the code official, or of a permit or certificate issued under the provisions of this code, shall be guilty of a misdemeanor, punishable by a fine of not more than $500.00, or by imprisonment not exceeding 90 days; or both such fine and imprisonment. Each day that a violation continues after due notice has been served shall be deemed a separate offense.

Exceptions: 903.2.8.1

a) An automatic sprinkler system shall not be required in Group R as adopted by Missouri State Statue 67.281 "Any governing body of any political subdivision that adopts the 2009 International Residential Code for One and Two-Family Dwellings or a subsequent edition of such code without mandated automatic fire sprinkler systems in Section R313 of such code shall retain the language in section R317 of the 2006 International Residential Code for two-family dwellings (R317.1) and townhouses (R317.2).

b) An automatic sprinkler system shall not be required in Group R when the habitable space is less than 3,750 sq. ft. for a three unit multiple family home (Three-Plex) or less than 5,000 sq. ft. for a unit multiple family home (Four-Plex) and no more than one story above grade. Each individual apartment, must be constructed with a 1-hour fire separation separating individual units and all garage areas must be protected by a one hour fire separation.

3301.1.3 Fireworks

(a) Any individual or organization may discharge fireworks as herein defined, without permit, on the 1st, 2nd, 3rd, 4th, and 5th days of July.
(b) No fireworks shall be discharged within 50 feet of any stand, booth, or other location where fireworks are being sold.
(c) Every person who shall sell fireworks in accordance to this Chapter shall post notice at his place of sale warning that no fireworks shall be discharged within 50 feet of such place of sale as per City ordinance and shall post notice that fireworks may be discharged within the City limits on July 1st, 2nd, 3rd, 4th, and 5th.

CONSTRUCTION DESIGN REQUIREMENTS CLIMATIC AND GEOGRAPHIC DESIGN CRITERIA:

Roof Snow Load:	20 psf
Windload (Second Gust):	75 mph (90 mph @ 3)
Seismic Category:	C
Weathering:	Severe
Frost Depth:	24”
Termite:	Moderate to Heavy
Decay:	Slight to Moderate
Winter Design Temperature:	0° to 10°F

MINIMUM UNIFORMLY DISTRIBUTED LIVE LOADS - RESIDENTIAL:

Exterior Balconies:	60 psf
Decks:	40 psf
Fire Escapes:	40 psf
Attics Without Storage:	10 psf
Attics With Storage:	20 psf
Vehicle Garages:	50 psf elevated garage floors shall be capable of supporting a 2,000 lb. load over a 20 sq. inch area
Rooms	40 psf
Stairs:	40 psf or a 300-lb load over a 4-inch area whichever products the greatest stress
Guardrails & Handrails:	200 lb. concentrated load applied at any point along the top in any direction.

SEWER CONNECTION:

Working Hours: The erection excavation, demolition, alteration, or repair of any building in any residential district is limited between the hours of 7:00 am and 9:00 pm, except in case of urgent necessity in the internet of the public health and safety, and then only with a permit from the city engineer.

Moving of Buildings: Any person desiring to move any structure over, along or through the public streets or thoroughfares of the city shall obtain a permit from the city engineer.

Sewer Connection: No permit required by this Chapter shall be issued and no sewer connection made until the owner or owners of the land to be served by such connections, or someone for him or theme, shall have paid to the City, the appropriate fee as provided as follows:

a) Single dwelling or mobile home: $150.00 per unit

b) Duplex and apartment building: $75.00 per unit

c) Rooming houses, dormitories, fraternities, motels, hotels, convalescent homes, hospitals and similar use:

5 to 11 occupants:	$150.00
12 to 74 occupants:	$300.00
75 to 99 occupants:	$420.00
100 to 149 occupants:	$600.00
150 to 199 occupants:	$840.00
200 to 399 occupants:	$1,200.00
400 occupants and over:	$2,400.00

(d) Single (commercial, office, retail, or wholesale) business: $150.00

e) Multi-(commercial, office, retail, or wholesale) business: $150.00
Each additional set of facilities over one: $75.00

f) Industrial uses: Warehouses and similar uses for the first five thousand (5,000) square feet: $150.00 **+ a fee for each additional five thousand square feet (5,000) or portion thereof:** $75.00

g) Assembly uses: Theaters, night clubs, restaurants, lecture halls, recreation centers, terminals, schools, churches, eleemosynary, religious and educational institutions and similar use:

Based on capacity:
First seventy-five persons: $150.00

For each additional one hundred persons or fraction thereof: $150.00
(Ord. 2197, §1; Ord. 2886, §3; Ord. 3422, §2)

Exhibits:
See attached exhibits for permit applications, plan requirements, windows, addressing, decks, residential electric, residential setbacks, driveway accessibility standards.

WINDOW REFERENCES:

RESIDENTIAL EMERGENCY ESCAPE WINDOW

EXHIBIT #1

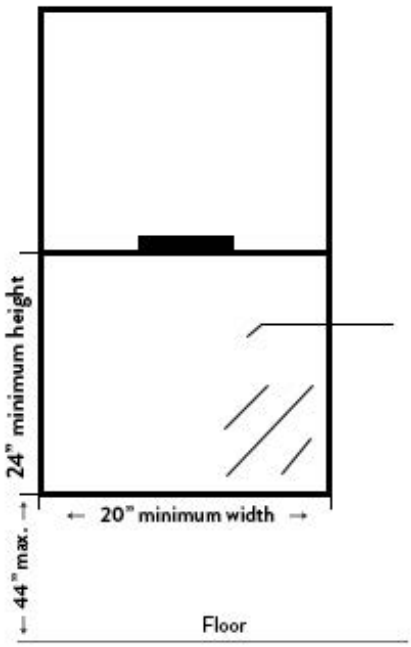

Window Height (Inches)

Window Width (Inches)	24	25	26	27	28	29	30	31	32	33	34	35	36	38	40	42	44	46	50
20	3.3	3.4	3.6	3.7	3.8	4.0	4.1	4.3	4.4	4.5	4.7	5.0	5.2	5.5	5.8	6.1	6.8	6.6	6.9
21	3.5	3.6	3.7	3.9	4.0	4.2	4.3	4.5	4.6	4.8	4.9	5.2	5.5	5.8	6.1	6.4	6.7	7.0	7.2
22	3.6	3.8	3.9	4.1	4.2	4.4	4.5	4.7	4.8	5.0	5.1	5.5	5.8	6.1	6.4	6.7	7.0	7.3	7.6
23	3.8	3.9	4.1	4.3	4.4	4.6	4.7	4.9	5.1	5.2	5.4	5.7	6.0	6.3	6.7	7.0	7.3	7.6	7.9
24	4.0	4.1	4.3	4.5	4.6	4.8	5.0	5.1	5.3	5.5	5.6	6.0	6.3	6.6	7.0	7.3	7.6	8.0	8.3
25	4.1	4.3	4.5	4.6	4.8	5.0	5.2	5.3	5.5	5.7	5.9	6.2	6.5	6.9	7.2	7.5	7.9	8.3	8.6
26	4.3	4.5	4.6	4.8	5.0	5.2	5.4	5.5	5.7	5.9	6.1	6.5	6.8	7.2	7.5	7.9	8.3	8.6	9.0
27	4.5	4.6	4.8	5.0	5.2	5.4	5.6	5.8	6.0	6.1	6.3	6.7	7.1	7.5	7.8	8.2	8.6	9.0	9.3
28	4.6	4.8	5.0	5.2	5.4	5.6	5.8	6.0	6.2	6.4	6.6	7.0	7.3	7.7	8.1	8.5	8.9	9.3	9.7
29	4.8	5.0	5.2	5.4	5.6	5.8	6.0	6.2	6.4	6.6	6.8	7.5	7.8	8.0	8.4	8.8	9.2	9.5	10.0
30	5.0	5.2	5.4	5.6	5.8	6.0	6.2	6.4	6.6	6.8	7.0	7.5	7.9	8.3	8.7	9.1	9.5	10.0	-
31	5.1	5.3	5.5	5.8	6.0	6.2	6.4	6.6	6.8	7.1	7.3	7.7	8.1	8.6	9.0	9.4	9.9	10.8	-
32	5.3	5.5	5.7	6.0	6.2	6.4	6.6	6.8	7.1	7.3	7.5	8.0	8.4	8.8	9.3	9.7	10.2	-	-
34	5.6	5.9	6.1	6.3	6.6	6.8	7.0	7.3	7.5	7.7	8.0	8.5	8.9	9.4	9.9	10.8	-	-	-

Formula for Window Size (Clear Opening) H x W - 144 sq. ft. of opening

Egress window (one in each bedroom)

BUILDING PERMIT INFORMATION
REQUIRED PLANS

Residential - Please submit two (2) complete sets or 1 PDF of the following:
Commercial - Please submit one (1) complete set or 1 PDF of the following:

Note: Commercial plans are required to be signed and sealed by a State of Missouri Registered Architect and/or a Registered Engineer. Commercial plans will also require plumbing, electrical, mechanical, and structural plans.

Site Plan – An outline of your property showing all property lines with dimensions. Also show building location on property with dimensions of building footprint and dimensions from building to property line.

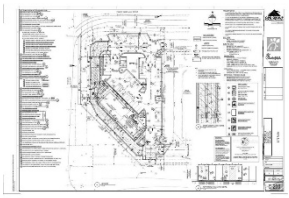

Footing and Foundation Plan – Show footing and foundation of building and also beam and pier location, size, and spacing.

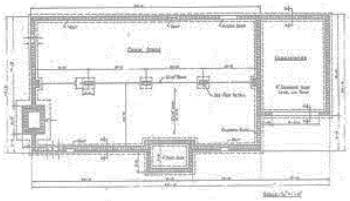

Floor Plan – Label all rooms and include dimensions. Also show window locations and kitchen & bath layout.

Wall Section- Show typical section from footing through roof and label materials used and spacing.

Elevation – Show at least a front and right side view of the home.

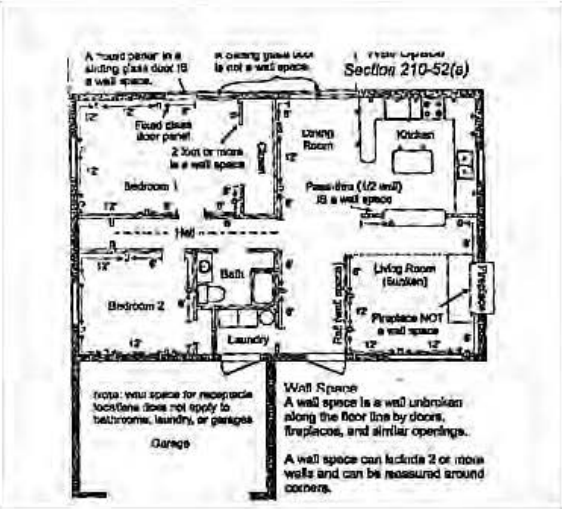
Section 210-52(a)
Fixed glass door panel
2 foot or more is a wall space
Dining Room
Kitchen
Bedroom 1
Pass-thru (1/2 wall) IS a wall space
Hall
Bath
Living Room (Sunken)
Bedroom 2
Fireplace NOT a wall space
Laundry
Fireplace
Garage
Wall Space
A wall space is a wall unbroken along the floor line by doors, fireplaces, and similar openings.
A wall space can include 2 or more walls and can be measured around corners.

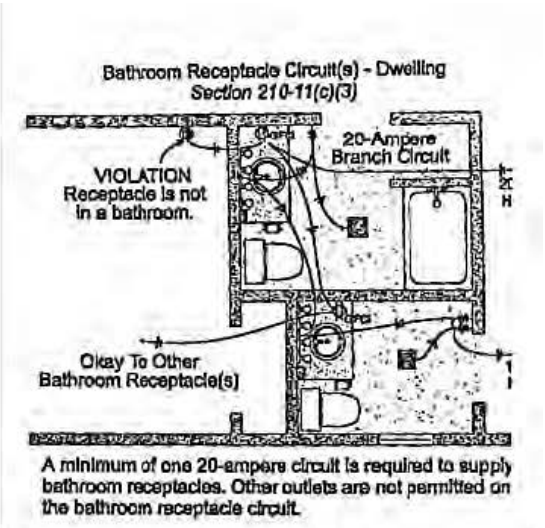
Bathroom Receptacle Circuit(s) - Dwelling
Section 210-11(c)(3)
20-Ampere Branch Circuit
VIOLATION
Receptacle is not in a bathroom.
Okay To Other Bathroom Receptacle(s)
A minimum of one 20-ampere circuit is required to supply bathroom receptacles. Other outlets are not permitted on the bathroom receptacle circuit.

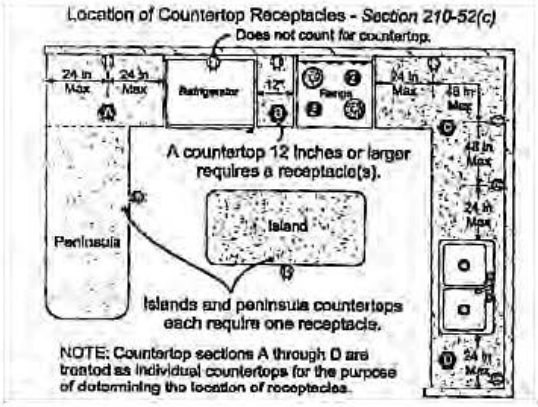
Location of Countertop Receptacles - Section 210-52(c)
Does not count for countertop.
24 in Max
24 in Max
Refrigerator
12"
Range
24 in Max
48 in Max
A countertop 12 inches or larger requires a receptacle(s).
Island
Peninsula
Islands and peninsula countertops each require one receptacle.
NOTE: Countertop sections A through D are treated as individual countertops for the purpose of determining the location of receptacles.

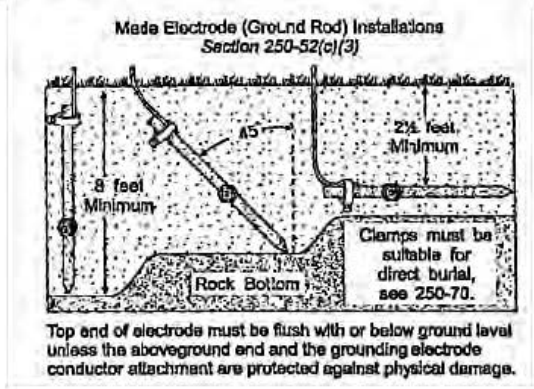
Made Electrode (Ground Rod) Installations
Section 250-52(c)(3)
45°
2½ feet, Minimum
8 feet Minimum
Clamps must be suitable for direct burial, see 250-70.
Rock Bottom
Top end of electrode must be flush with or below ground level unless the aboveground end and the grounding electrode conductor attachment are protected against physical damage.

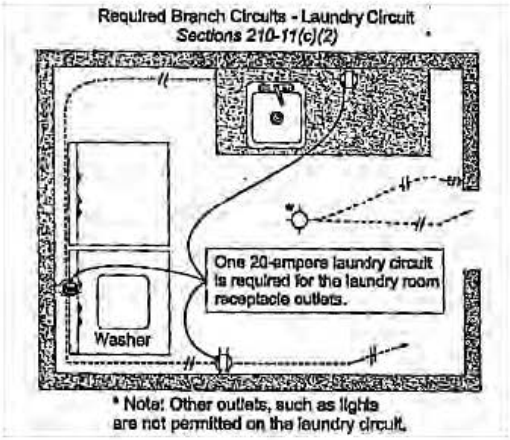
Required Branch Circuits - Laundry Circuit
Sections 210-11(c)(2)
One 20-ampere laundry circuit is required for the laundry room receptacle outlets.
Washer
* Note: Other outlets, such as lights are not permitted on the laundry circuit.

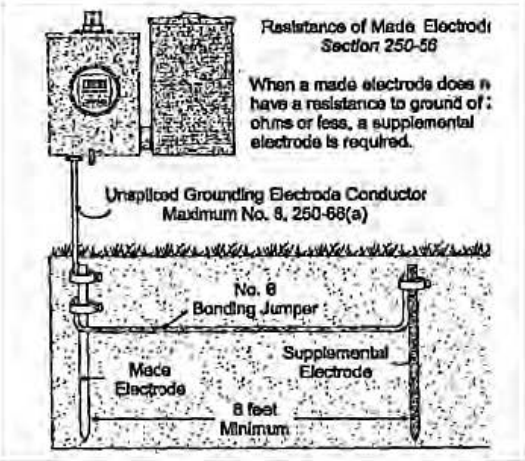
Resistance of Made Electrode
Section 250-56
When a made electrode does not have a resistance to ground of 25 ohms or less, a supplemental electrode is required.
Unspliced Grounding Electrode Conductor Maximum No. 8, 250-68(a)
No. 6 Bonding Jumper
Made Electrode
Supplemental Electrode
8 feet Minimum

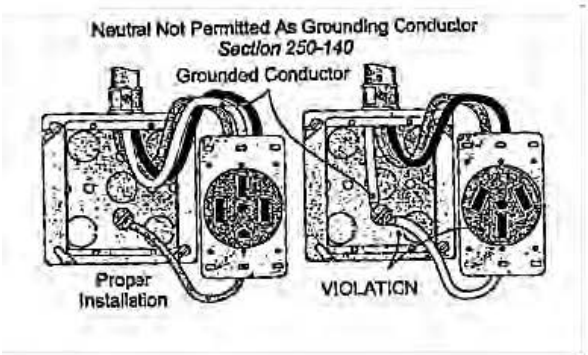
Neutral Not Permitted As Grounding Conductor
Section 250-140
Grounded Conductor
Proper Installation
VIOLATION

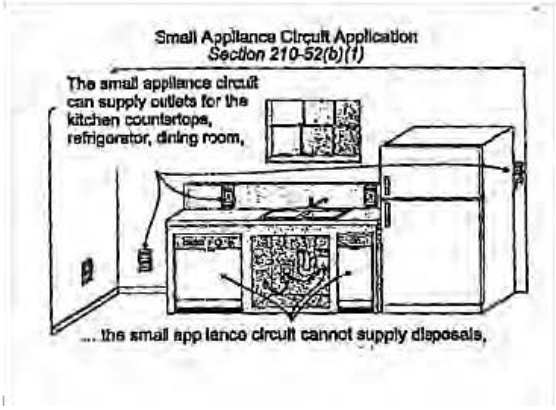
Small Appliance Circuit Application
Section 210-52(b)(1)
The small appliance circuit can supply outlets for the kitchen countertops, refrigerator, dining room,
... the small appliance circuit cannot supply disposals,

APPROVED ADDRESS LOCATIONS:

APPROVED ADDRESS LOCATIONS

APPROVED ADDRESS LOCATIONS

EXHIBIT #3

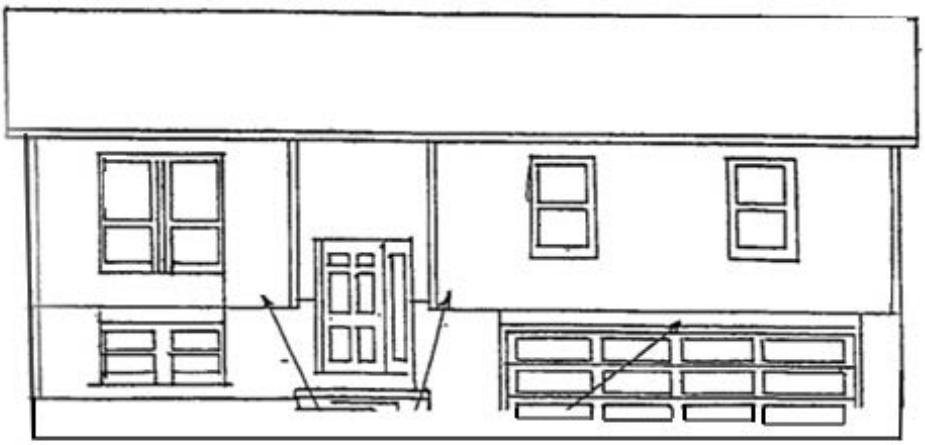

DECK FRAMING PLAN

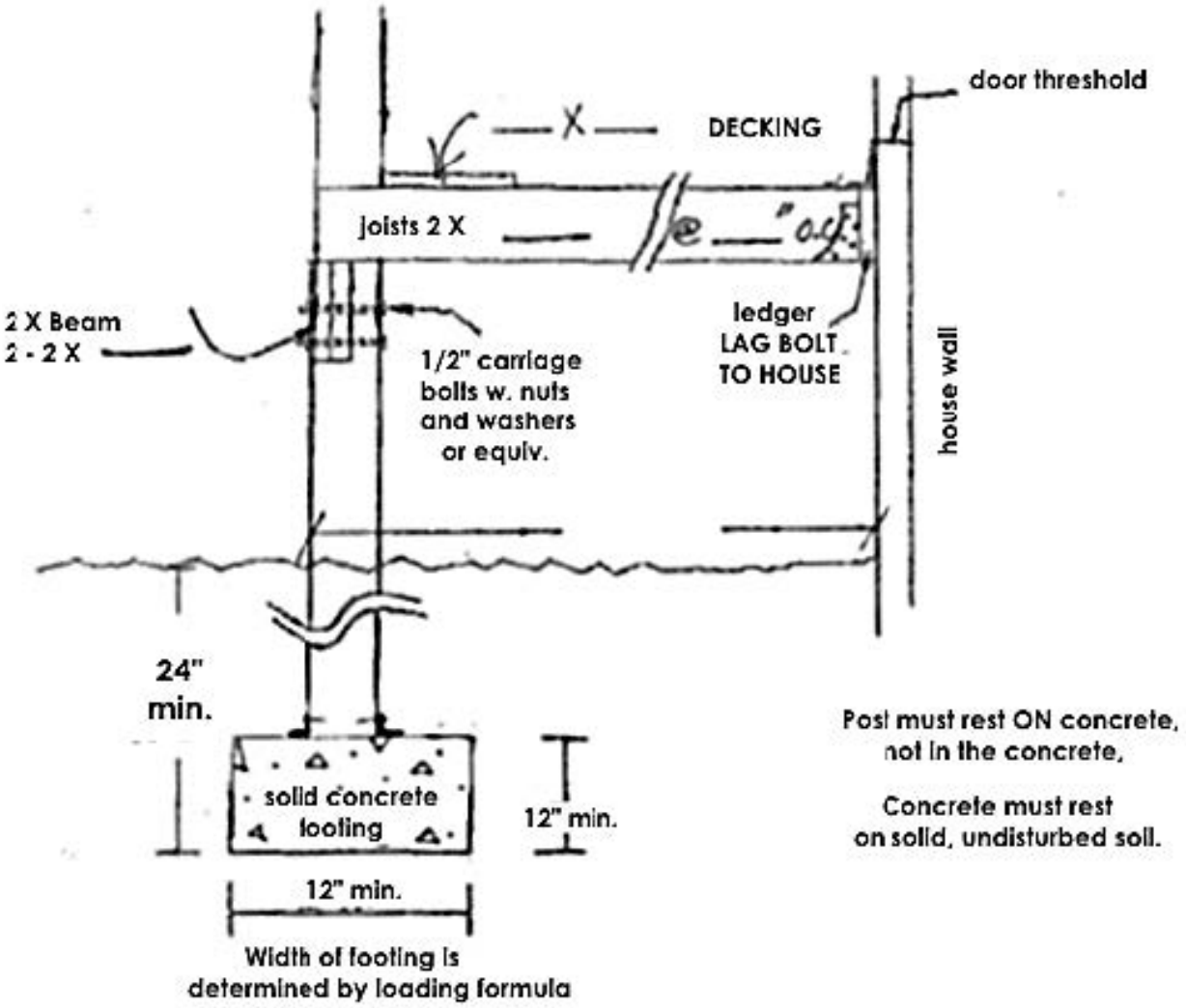

Overhead Service

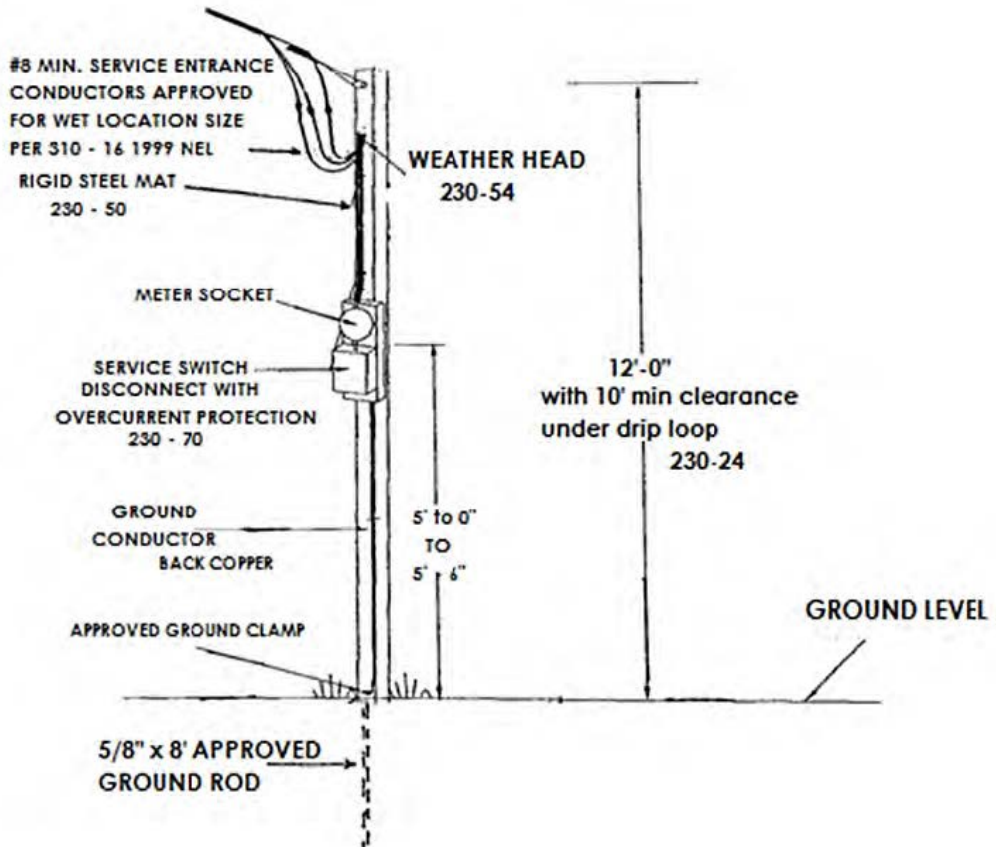

NOTE:

1. **Temp. service poles must be braced and provided with GFCI protection.**
2. **All equipment must be weatherproofed and rated for wet locations.**
3. **Ground conductor may attach to a pole ground in lieu of using a Grounding Rod.**

RESIDENTIAL SET BACKS

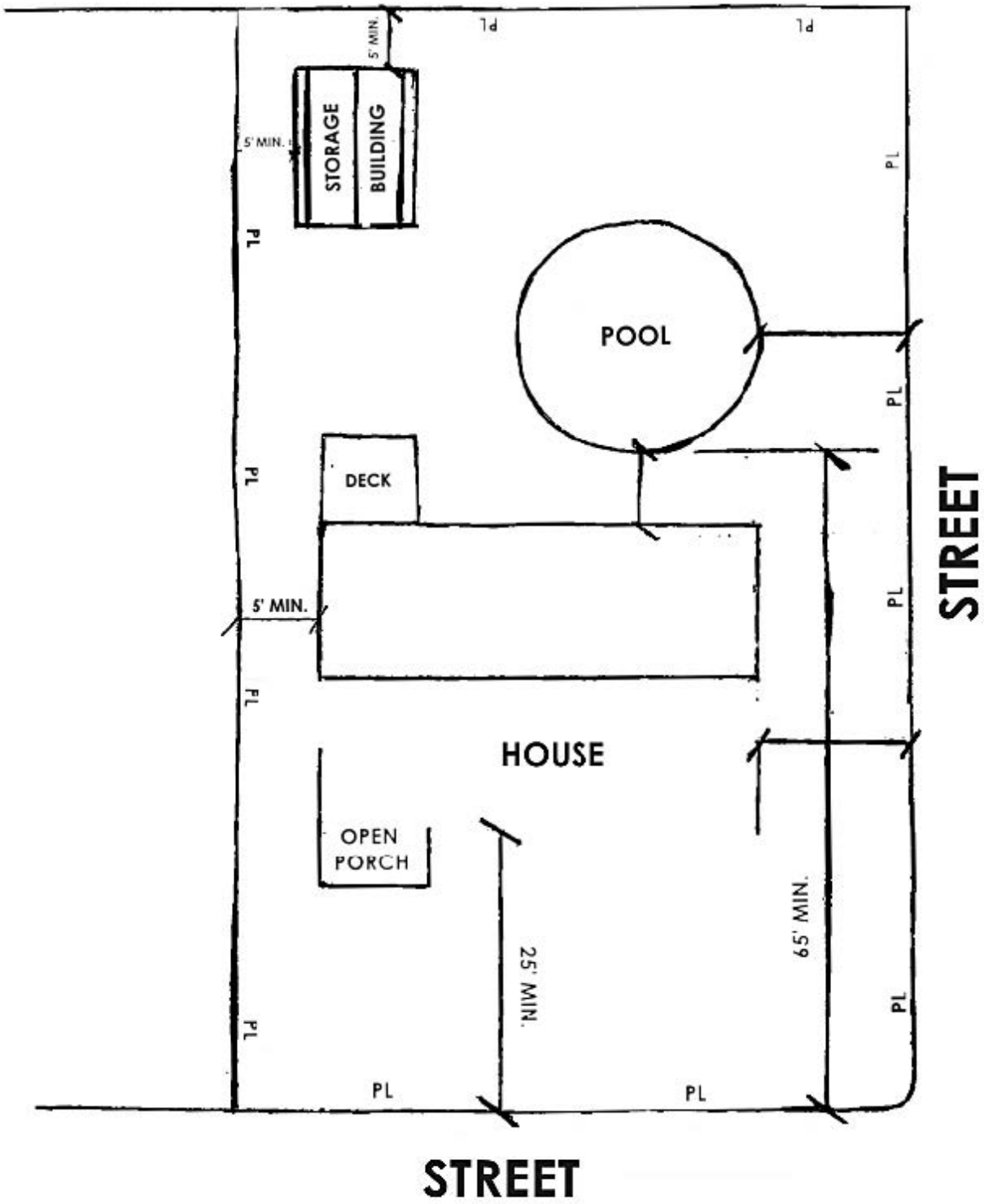

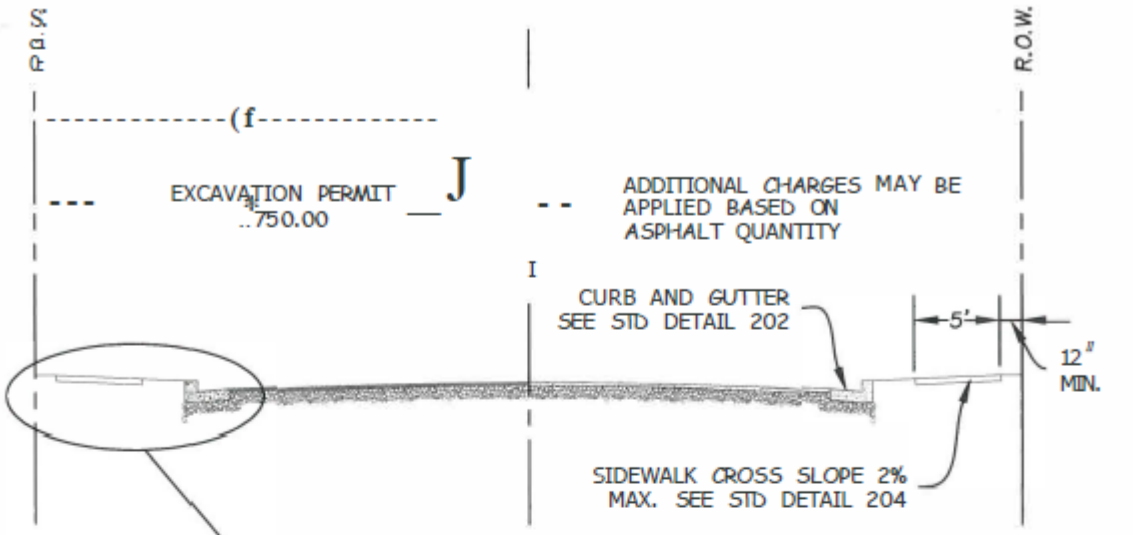

ADDITIONAL CHARGES MAY BE APPL/ED /F RESTORATION IS NOT RESTORED IN 7 DAYS FOR CONG. OR .30 DAYS FOR DIRTWORK. TIME MAY BE EXTENDED BASED ON SIZE OF REPAIR AND WEATHER CONDITIONS. CHARGES MAY BE INCREASED DEPEND/NG ON SIZE OF REPAIR. DIRT RESTORATION SHALL BE COMPLETED IN R.O.W. WITHIN .30 DAYS OF EXCAVATION OR A $200 CHARGE WILL BE BILLED TO PERMIT HOLDER.

NOTES:

FOR CURB, DR/VE APRON AND SIDEWALK INSPECTIONS CALL THE PUBLIC WORKS DEPARTMENT AT 57.3-.364-8659.

24 HOUR NOT/CE TO PUBLIC WORKS DEPARTMENT IS REQUIRED BEFORE EXCAVATION BEG/NS IN RIGHT OF WAY.

CONTRACTOR SHALL PROVIDE ALL SIGNS AND BARRICADES.

REFUNDS OR ADDITIONAL FEES WILL BE BASED ON MATERIAL CALCULATIONS AFTER THE EXCAVATED AREA IS COMPLETELY RESTORED TO GOOD OR BETTER CONDITION AS ORIGINAL.

DIRT RESTORATION SHALL BE COMPLETED IN R.O.W. WITHIN .30 DAYS OF EXCAVATION OR A $200 PENALTY WILL BE BILLED TO PERMIT HOLDER.

OPEN EXCAVA T/ONS WILL NOT BE ALLOWED IN STREET OVERNIGHT UNLESS PRIOR APPROVAL WAS OBTAINED FROM THE PUBLIC WORKS DIRECTOR.

FOR DR/VE APRONS REFER TO STANDARD 212.

FOR STREET PATCH DETAIL REFER TO STANDARD 102.

PERMANENT PR/VA TE APPURTENANCES SHALL NOT BE INSTALLED IN OR ENCROACH ON THE CITY RIGHT-OF-WAY; IE. LAWN SPRINKLER LINES, FENCES, UNDERGROUND WIRING, ETC.

EXCAVATION PERM/TS WILL BE CLOSED OUT AND REFUNDED /F NO ACTIVITY WITHIN 1 YEAR.

PDF FILE AVAILABLE AT: www.rollacity.org/pubworks/drawings.shtm

ROLLA		CITY OF ROLLA DEPARTMENT OF PUBLIC WORKS		
APPROVED: NUMBER E-21913	5/1/18	REVISED: 05/24/11 04/30/18	STREET AND SIDEWALK STD. AND SPEC. REQUIREMENTS MINIMUM EXCAVATION DEPOSITS	STANDARD 100
DIRECTOR OF PUBLIC WORKS	DATE			

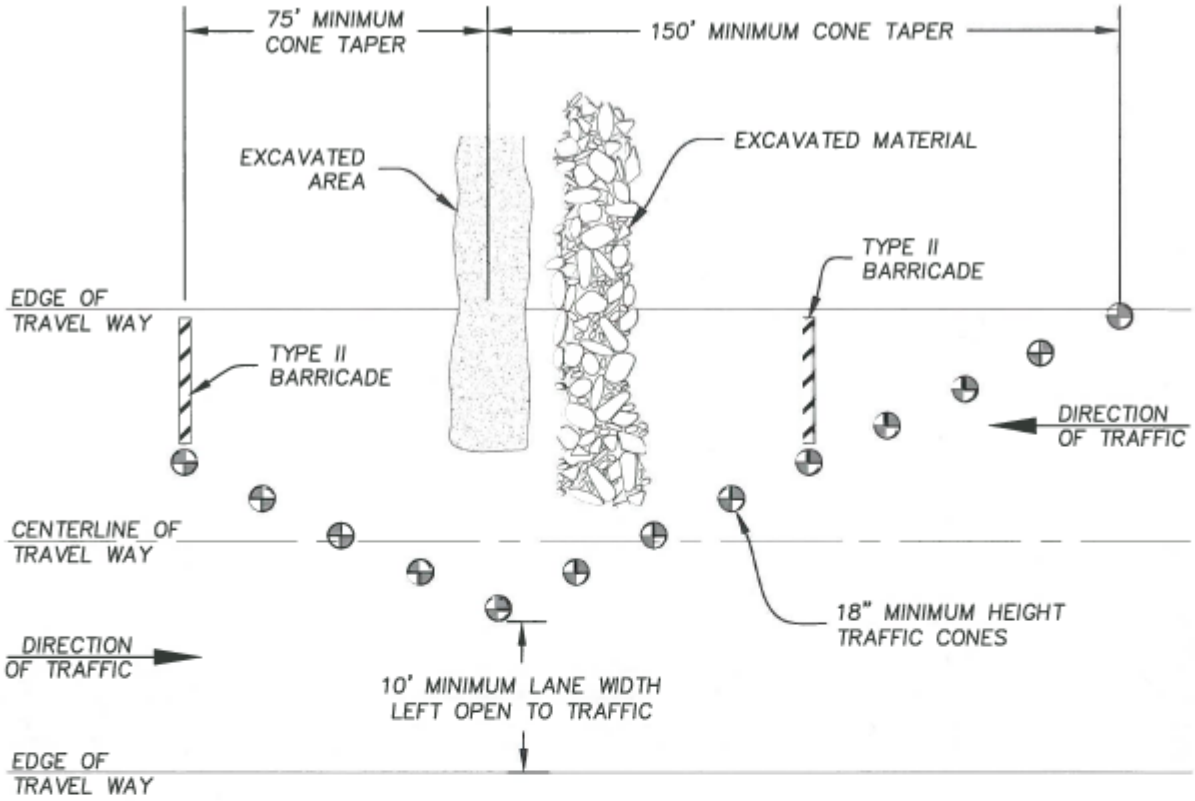

NOTES:

EXCAVATION TO PROGRESS AS TO ALLOW AT LEAST A 10' MINIMUM LANE WIDTH OPEN TO TRAFFIC. UNDER NO CIRCUMSTANCES IS THE ENTIRE STREET TO BE CLOSED TO TRAFFIC.

EXCAVATION TO BE SCHEDULED AS TO BE COMPLETED DURING DAY LIGHT HOURS. UNDER NO CIRCUMSTANCES IS AN EXCAVATION TO BE LEFT UNCOVERED OVER NIGHT OR LEFT UNATTENDED.

IF AT ANY TIME A QUESTION ARISES AS TO PROPER PLACEMENT OF BARRICADES, CALL 573-364-8659 TO REQUEST ASSISTANCE.

BARRICADES MUST CONFORM TO THE "MANUAL OF UNIFORM TRAFFIC CONTROL DEVICES". IF BARRICADES ARE NEEDED, THEY MAY BE OBTAINED FROM LOCAL EQUIPMENT RENTAL STORES.

STREET LANE RESTRICTIONS AND/OR CLOSINGS SHALL BE COORDINATED WITH THE CITY OF ROLLA STREET DEPARTMENT. CONTRACTOR IS RESPONSIBLE FOR BUT NOT LIMITED TO PROVIDING ALL TRAFFIC CONTROL SIGNAGE, LIGHTS, CONES, BARRICADES, FLAGPERSONS, AND/OR ANY DEVICE NEEDED FOR SAFE TRAFFIC CONTROL ON FEDERAL, STATE, COUNTY, AND CITY RIGHT-OF-WAYS.

PDF FILE AVAILABLE AT www.rollacity.org/pubworks/drawings.shtm

ROLLA	CITY OF ROLLA DEPARTMENT OF PUBLIC WORKS			
APPROVED:	8/1/18	REVISED:	STANDARD BARRICADING FOR EXCAVATION	STANDARD 101
DIRECTOR OF PUBLIC WORKS	DATE			

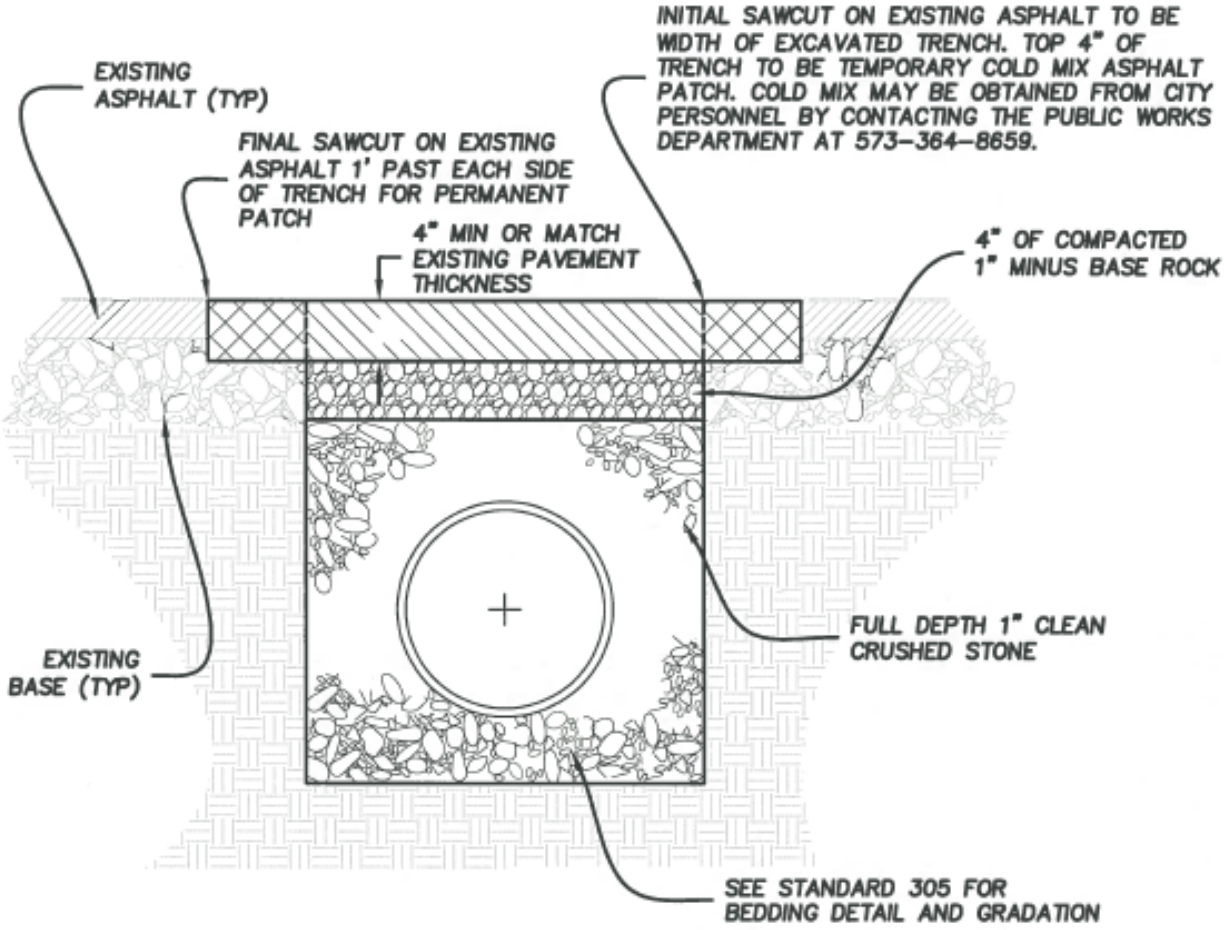

NOTES:

24 HOUR NOTICE TO PUBLIC WORKS DEPARTMENT IS REQUIRED BEFORE DIGGING IN THE RIGHT OF WAY.

BP1 ASPHALTIC CONCRETE SHALL BE COMPACTED IN PLACE IN MAXIMUM LIFTS OF 3 INCHES.

PDF FILE AVAILABLE AT www.rollacity.org/pubworks/drawings.shtm

ROLLA	CITY OF ROLLA DEPARTMENT OF PUBLIC WORKS			
APPROVED: NUMBER E-21518 DIRECTOR OF PUBLIC WORKS	5/1/13 DATE	REVISED: 02/16/2011 06/06/2011 04/30/2013	ASPHALT STREET PATCH	STANDARD 102

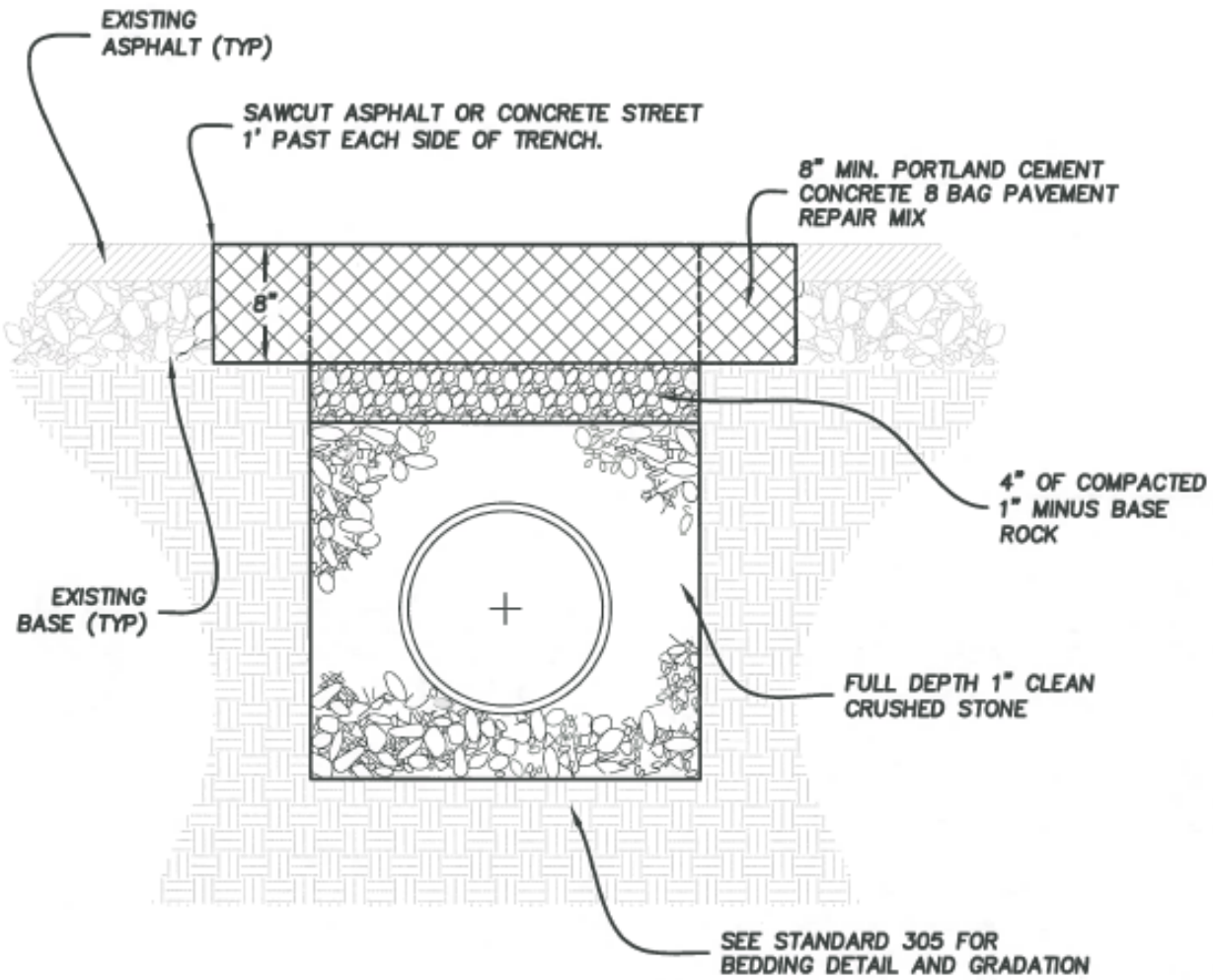

NOTES:

24 HOUR NOTICE TO PUBLIC WORKS DEPARTMENT IS REQUIRED BEFORE DIGGING IN THE RIGHT OF WAY.

PORTLAND CEMENT CONCRETE REQUIRES A MINIMUM OF 4 HOURS CURING TIME BEFORE BEING OPENED TO TRAFFIC. SURFACE SHALL BE BROOM FINISHED.

PDF FILE AVAILABLE AT www.rollacity.org/pubworks/drawings.shtm

CITY OF ROLLA DEPARTMENT OF PUBLIC WORKS				
APPROVED: NUMBER DIRECTOR OF PUBLIC WORKS	5/6/13 DATE	REVISED: 02/16/2011 05/05/2011 04/30/2018	CONCRETE STREET PATCH	STANDARD 103

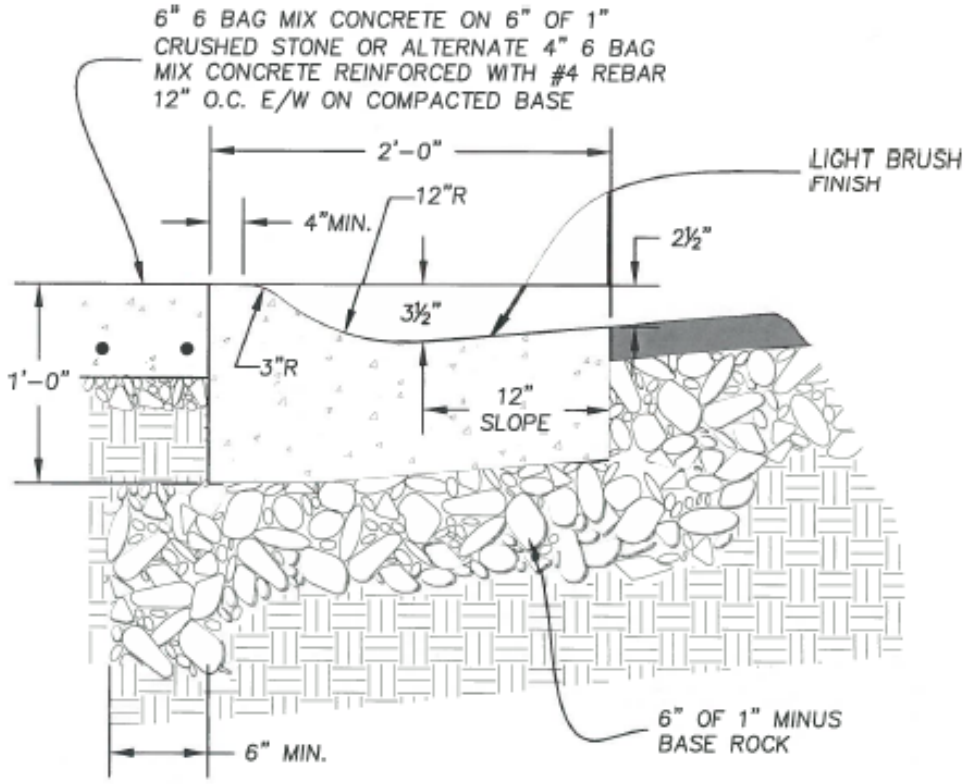

NOTES:

ROLLOVER CURB TO BE APPROVED ON CASE BY CASE BASIS UPON PWD APPROVAL.

USE OF ROLLOVER CURB WILL REQUIRE ADDITIONAL STORM SEWER INLETS. REFER TO SECTION 3.10 OF THE CITY'S STORM WATER DESIGN STANDARDS, TABLE 3-6, FOR ALLOWABLE GUTTER FLOW AND SPREAD LIMITS.

CONCRETE SHALL BE 6 BAG MIX (4,000 PSI) WITH SLUMP TEST LIMITS OF NOT LESS THAN 1 INCH NOR MORE THAN 4 INCHES.

WHERE CURB IS PLACED WITHOUT STREET IMPROVEMENT, A MIN. OF 6 INCHES BASEROCK IS REQUIRED AT NOT LESS THAN 95% STANDARD PROCTER TEST AT OPTIMUM MOISTURE CONTENT.

1/2" PREMOLDED EXPANSION JOINT PLACED EVERY 100 FT. (MIN.) THROUGH ENTIRE CROSS SECTION OF CURB.

CONSTRUCTION JOINTS SHALL BE PLACED EVERY 10 FT.

FRAME AND GRATE ASSEMBLY SHALL BE NEENAH R-3501-TR OR -TL (DEPENDING ON FLOW DIRECTION) OR APPROVED EQUAL IF INLET FALLS IN DRIVEWAY.

PDF FILE AVAILABLE AT www.rollacity.org/pubworks/drawings.shtm

ROLLA	CITY OF ROLLA DEPARTMENT OF PUBLIC WORKS			
APPROVED: NUMBER E-21918 DIRECTOR OF PUBLIC WORKS	DATE	REVISED: 04/30/2018	OPTIONAL ROLLOVER CONCRETE CURB AND GUTTER SECTION ADJACENT SIDEWALK MANDATORY	STANDARD 200

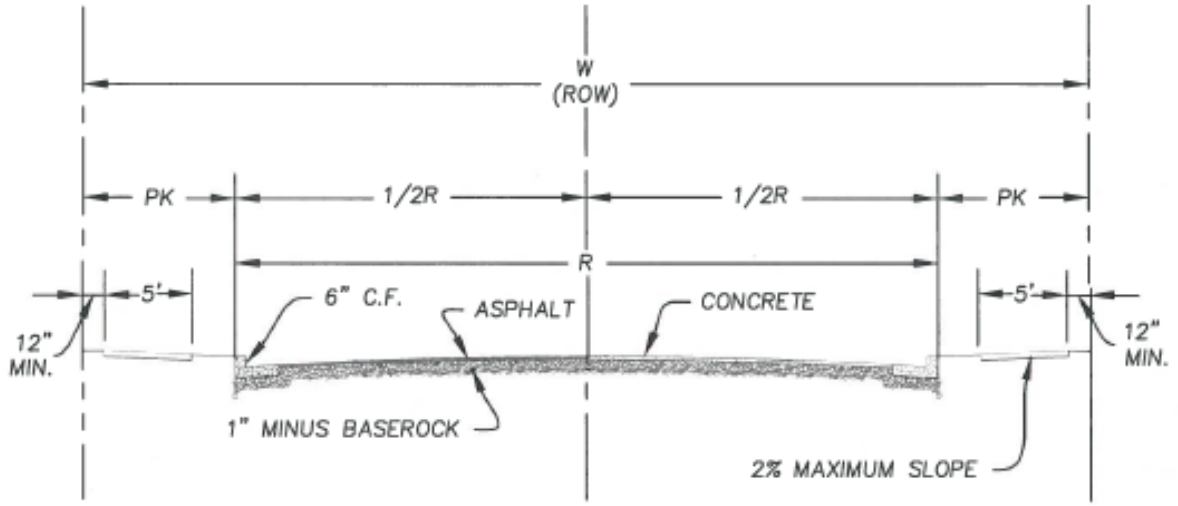

TYPE	W	R	PK	S	PARKING	GRASS STRIP	MINIMUM THICKNESS					
							FULL DEPTH ASPHALT		ASPHALT/ BASE ROCK		CONCRETE	
							ASPHALT	BASE ROCK	ASPHALT	BASE ROCK	CONCRETE	BASE ROCK
CUL-DE-SAC (ADT <250)	50'	30'	10'	* ONE SIDE 5'	BOTH SIDES	NONE	3 ½"	4"	3"	6"	6"	4"
ESTATE LANE (ADT <1000)	50'	30'	10'	** ONE SIDE 5'	BOTH SIDES	NONE	4"	4"	3"	8"	6"	4"
MINOR RESIDENTIAL (ADT <1000)	50'	30'	10'	ONE SIDE 5'	BOTH SIDES	3'	4"	4"	3"	8"	6"	4"
RESIDENTIAL COLLECTOR (ADT 1000-3000)	50'	34'	8'	BOTH SIDES 5'	ONE SIDE	3'	6 ½"	4"	4"	12"	6"	4"
COLLECTOR/COMMERCIAL (ADT 2000-6000)	60'	34'	13'	BOTH SIDES 5'	NO PARKING	3'	10"	4"	5"	16"	7"	4"
INDUSTRIAL (ADT <6000)	60'	34'	13'	NONE	NO PARKING	NONE	10"	4"	5"	16"	7"	4"
ARTERIAL (ADT 3000-10000)	80'	34'	23'	BOTH SIDES 5'	NO PARKING	3'	12"	4"	6"	18"	8"	4"

W=WIDTH S=SIDEWALK R=WIDTH OF ROADWAY ADT=AVERAGE DAILY TRAFFIC

NOTES:

SUBGRADE AND AGGREGATE BASE SHALL BE COMPACTED TO NOT LESS THAN 95% STANDARD PROCTER TEST AT OPTIMUM MOISTURE CONTENT.

CROWN NOT LESS THAN 4 INCHES NOR MORE THAN 6 INCHES.

*NO SIDEWALKS WILL BE REQUIRED ON RESIDENTIAL CUL-DE-SAC STREETS THAT ARE LESS THAN 600 FEET IN LENGTH AND HAVE NO MORE THAN 15 LOTS OR DWELLING UNITS.

**NO SIDEWALKS WILL BE REQUIRED ON ESTATE LANES WITH LARGE LOTS 25,000 SQUARE FEET, RESIDENTIAL SUBDIVISIONS WITH 10 LOTS OR MORE WITH A MINIMUM PER LOT FRONTAGE OF 150 FEET.

SUBGRADE MUST BE PROOFROLLED PRIOR TO INSTALLATION OF AGGREGATE MATERIAL. AGGREGATE MATERIAL MUST BE PROOFROLLED PRIOR TO ASPHALT INSTALLATION. PROOFROLLING SHALL BE DONE BY CITY PERSONNEL.

PDF FILE AVAILABLE AT www.rollacity.org/pubworks/drawings.shtm

	CITY OF ROLLA DEPARTMENT OF PUBLIC WORKS		
APPROVED: NUMBER E-21918 / DIRECTOR OF PUBLIC WORKS	DATE 5/6/18	REVISED: 04/30/2018	TYPICAL STREET SECTION	STANDARD 201

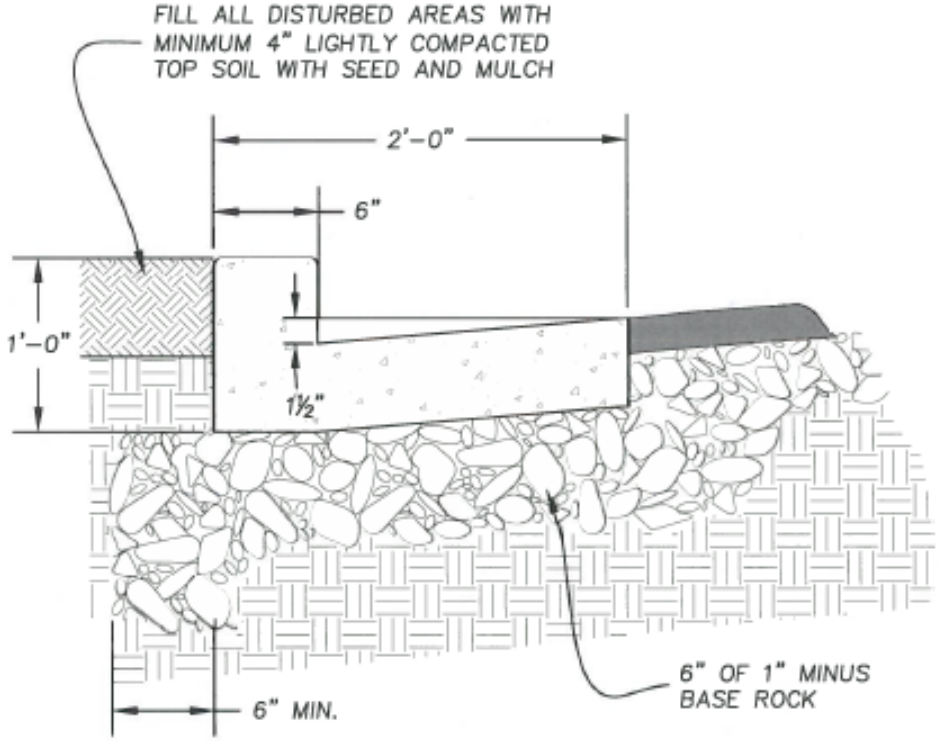

NOTES:

CONCRETE SHALL BE 6 BAG MIX (4,000 PSI) WITH SLUMP TEST LIMITS OF NOT LESS THAN 1 INCH NOR MORE THAN 4 INCHES.

WHERE CURB IS PLACED WITHOUT STREET IMPROVEMENT, A MIN, OF 6 INCHES BASEROCK IS REQUIRED AT NOT LESS THAN 95% STANDARD PROCTER TEST AT OPTIMUM MOISTURE CONTENT.

1/2" PREMOLDED EXPANSION JOINT PLACED EVERY 100 FT. (MIN.) THROUGH ENTIRE CROSS SECTION OF CURB.

CONSTRUCTION JOINTS SHALL BE PLACED EVERY 10 FT.

CONCRETE TO HAVE LIGHT BRUSH FINISH AND 1/4"R EDGE ON EXPOSED CORNERS.

PDF FILE AVAILABLE AT www.rollacity.org/pubworks/drawings.shtm

ROLLA	CITY OF ROLLA DEPARTMENT OF PUBLIC WORKS			
APPROVED: DIRECTOR OF PUBLIC WORKS	5/6/18 DATE	REVISED: 04/30/2018	CONCRETE CURB AND GUTTER SECTION	STANDARD 202

STATE OF MISSOURI STEPHEN LEE HARRIS NUMBER E-21918 REGISTERED PROFESSIONAL ENGINEER

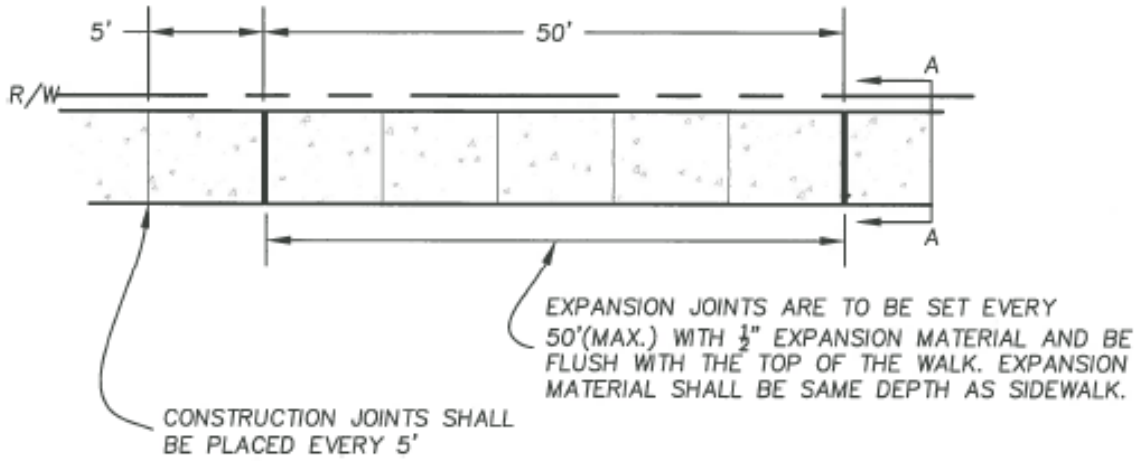

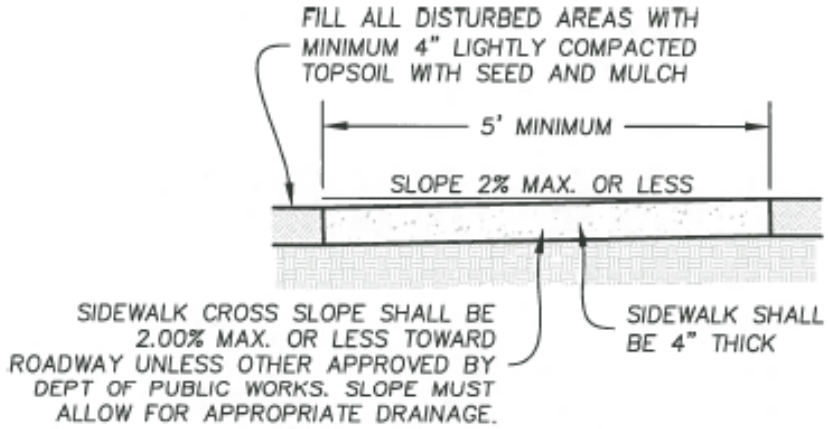

SECTION A–A

NOTES:

6 BAG CONCRETE MIX (4,000 PSI) SHALL BE USED ON ALL SIDEWALK.

ALL FILL UNDER SIDEWALK SHALL BE TO 95% COMPACTION NONORGANIC MATERIAL APPROVED BY DEPARTMENT OF PUBLIC WORKS.

WHEN CROSSING THE WIDTH OF A DRIVEWAY, SIDEWALK SHALL BE 6" THICK CONCRETE WITH 6" OF 1" CLEAN ROCK UNDERNEATH.

CONCRETE TO HAVE LIGHT BRUSH FINISH AND 1/4"R EDGE ON EXPOSED CORNERS.

PDF FILE AVAILABLE AT www.rollacity.org/pubworks/drawings.shtm

ROLLA	CITY OF ROLLA DEPARTMENT OF PUBLIC WORKS			
APPROVED: NUMBER E-21918 5/1/18 DIRECTOR OF PUBLIC WORKS DATE	REVISED: 08/12/09 04/30/18	CONCRETE SIDEWALK STANDARD	STANDARD 204

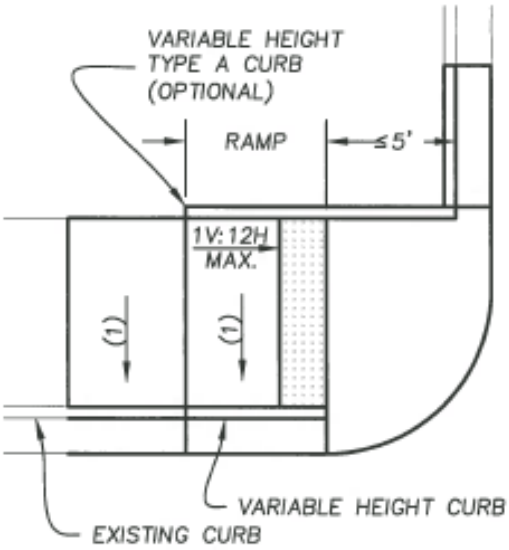

OPTION A

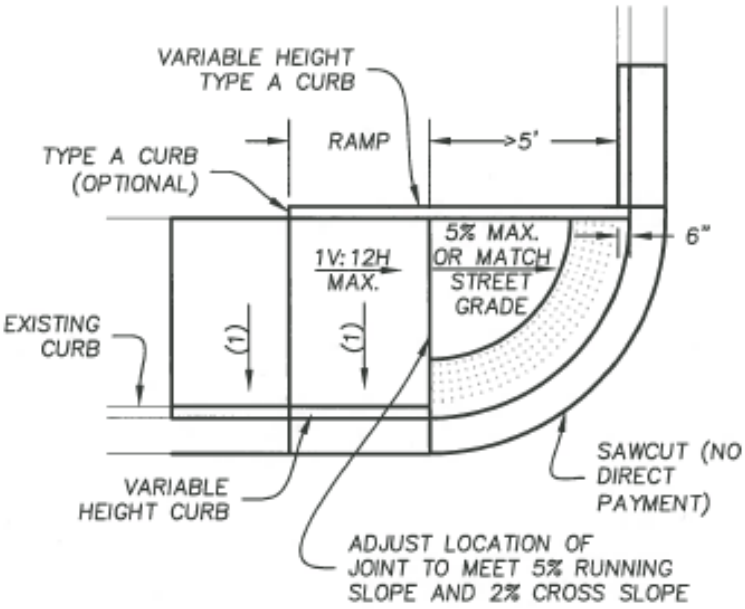

OPTION B

(1) 2.00% MAXIMUM

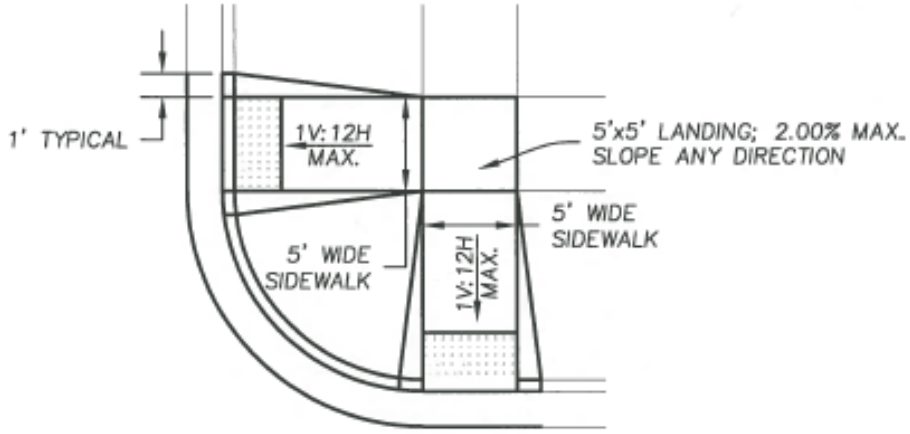

OPTION C

ROLLA	CITY OF ROLLA DEPARTMENT OF PUBLIC WORKS			
APPROVED: NUMBER E-21918 DIRECTOR OF PUBLIC WORKS	DATE 5/6/18	REVISED: 04/30/2018	PERPENDICULAR HANDICAP RAMP OPTIONS A, B AND C STANDARD	STANDARD 205

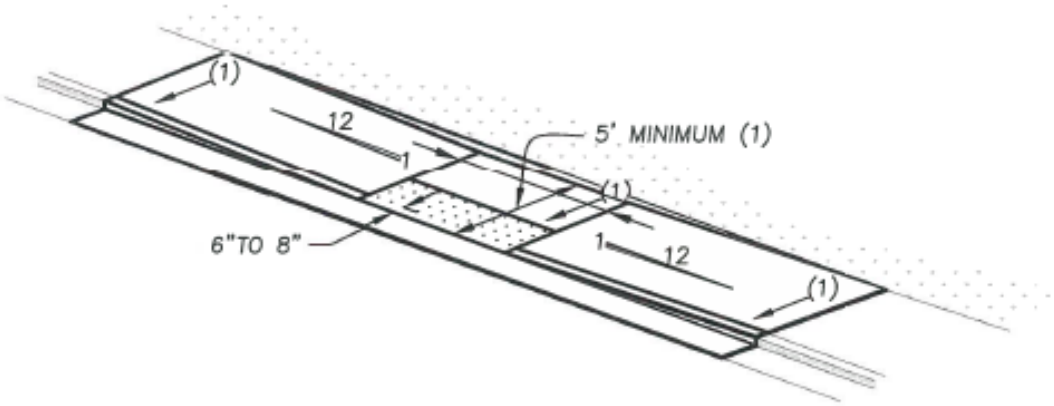

(1) 2.00% MAXIMUM

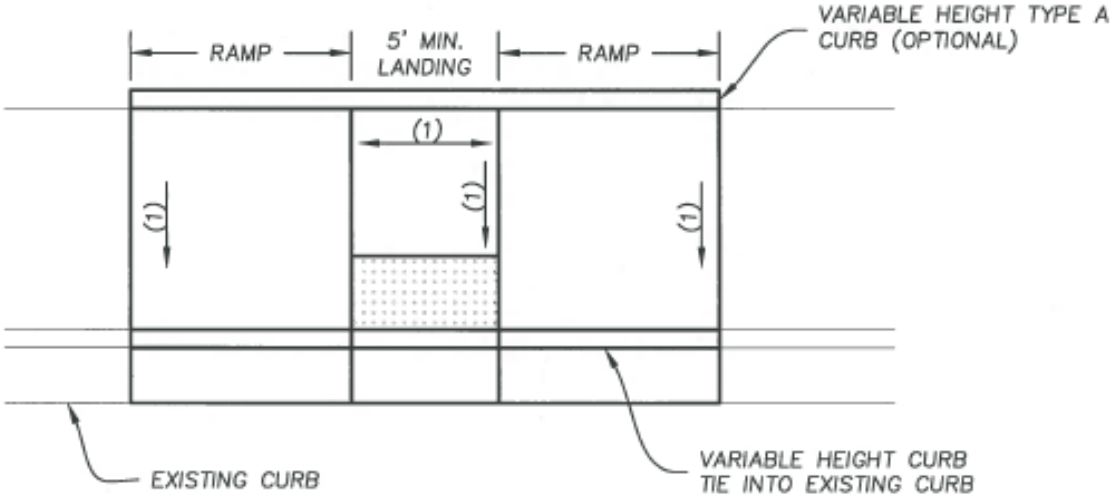

PDF FILE AVAILABLE AT www.rollacity.org/pubworks/drawings.shtm

ROLLA	CITY OF ROLLA DEPARTMENT OF PUBLIC WORKS			
APPROVED NUMBER E-21918 / DIRECTOR OF PUBLIC WORKS	5/1/18 DATE	REVISED: 04/30/2018	PARALLEL HANDICAP RAMP STANDARD	STANDARD 206

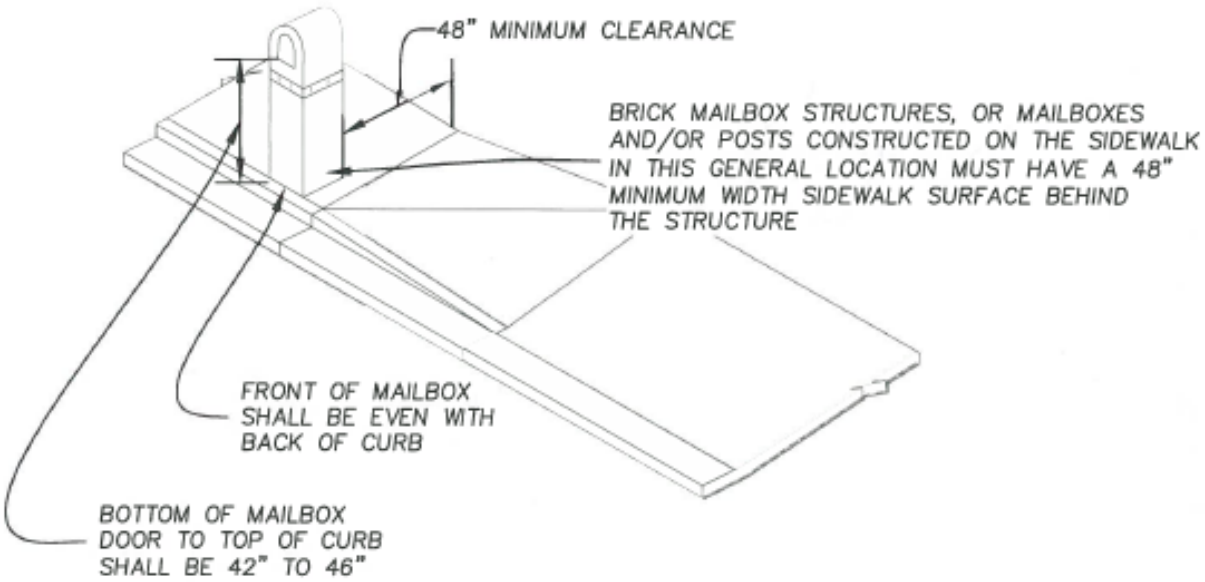

PDF FILE AVAILABLE AT www.rollacity.org/pubworks/drawings.shtm

ROLLA	CITY OF ROLLA DEPARTMENT OF PUBLIC WORKS			
APPROVED: NUMBER E-21918 DIRECTOR OF PUBLIC WORKS	5/1/18 DATE	REVISED: 04/30/2018	MAILBOX LOCATION STANDARD	STANDARD 211

CONSTRUCTION JOINT 1" DEEP AND GROOVED OR SAWCUT AT END OF TAPER. FOR DRIVE APRONS EXCEEDING 12' WIDE, CONSTRUCTION JOINTS SHALL BE EVENLY SPACED ACROSS APRON AT INCREMENTS NO GREATER THAN 12'6". ADDITIONAL EXPANSION JOINTS SHALL BE USED IF APRON IS POURED IN SEPARATE POURS. FOR DRIVE APRONS EXCEEDING 25' WIDE, EXPANSION JOINTS SHALL BE EVENLY SPACED ACROSS APRON AT INCREMENTS NO GREATER THAN 25'.

RESIDENTIAL DRIVE APRONS EXCEEDING 24' WIDE MUST BE APPROVED BY CITY ENGINEER.

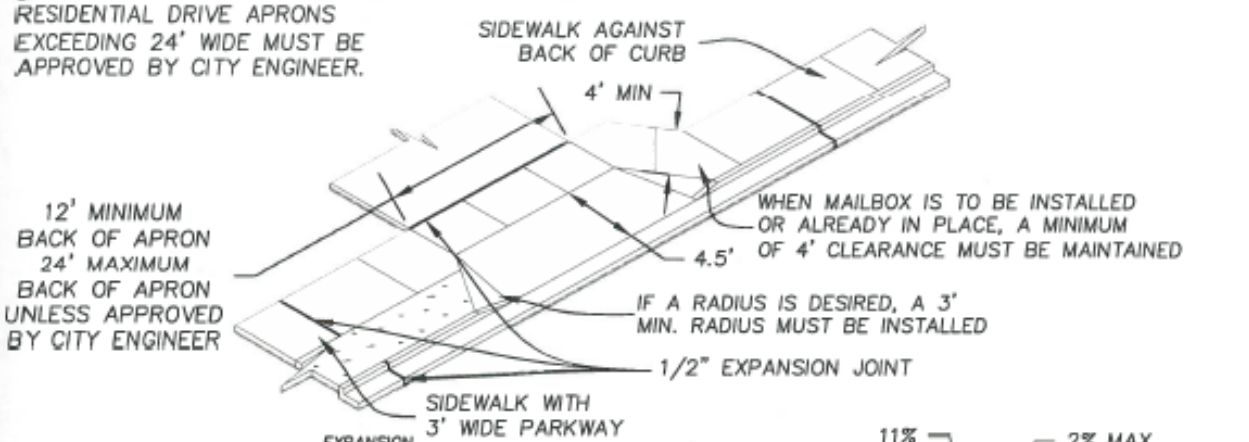

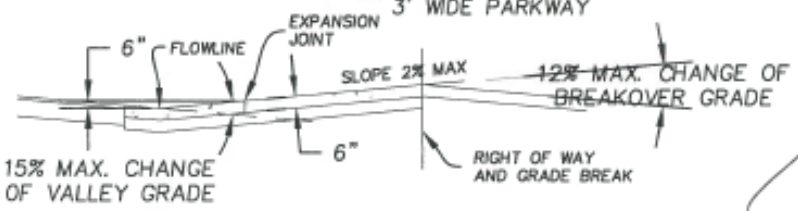

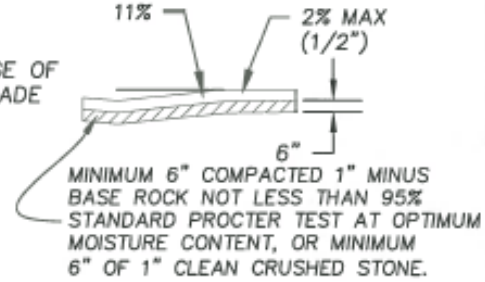

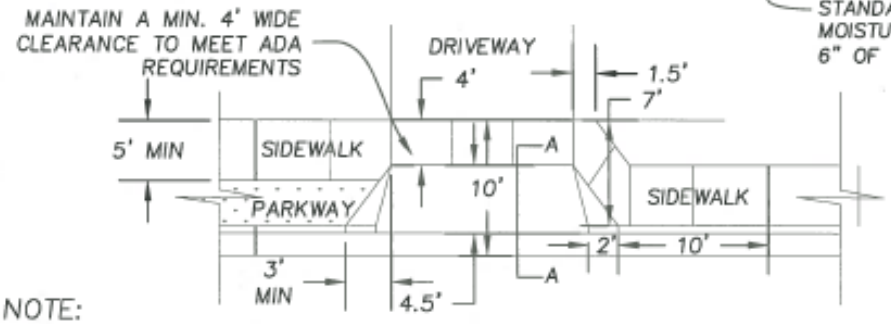

NOTE:

WHEN INSTALLING A NEW CONCRETE DRIVE AT EXISTING CONCRETE CURB AND GUTTER, THE ENTIRE CURB AND GUTTER SECTION IN THE AREA OF THE NEW DRIVE MUST BE REMOVED BY EITHER SAWCUTTING OR REMOVING TO AN EXISTING JOINT.

CONCRETE SHALL BE 6 BAG MIX (4,000 PSI) WITH SLUMP TEST LIMIT OF NOT LESS THAN 2 INCHES NOR MORE THAN 4 INCHES.

AN EXCAVATION PERMIT IS REQUIRED TO DIG IN PUBLIC RIGHT OF WAY. PERMIT SHALL BE OBTAINED FROM THE CITY OF ROLLA COMMUNITY DEVELOPMENT DEPARTMENT AT (573) 364-5333. AN INSPECTION IS REQUIRED BEFORE POURING ANY CONCRETE IN PUBLIC RIGHT OF WAY. CONTACT THE CITY OF ROLLA PUBLIC WORKS DEPARTMENT AT (573) 364-8659 FOR INSPECTION.

PDF FILE AVAILABLE AT www.rollacity.org/pubworks/drawings.shtm

STATE OF MISSOURI STEPHEN LEE HARGIS NUMBER E-21918 REGISTERED PROFESSIONAL ENGINEER	CITY OF ROLLA DEPARTMENT OF PUBLIC WORKS			
APPROVED: DIRECTOR OF PUBLIC WORKS	9/26/18 DATE	REVISED: 09-23-09 04-30-18 07-03-18	ADA COMPLIANT DISHPAN DRIVEWAY STANDARD	STANDARD 212

CONSTRUCTION JOINT 1" DEEP AND GROOVED OR SAWCUT AT END OF TAPER. FOR DRIVE APRONS EXCEEDING 12' WIDE, CONSTRUCTION JOINTS SHALL BE EVENLY SPACED ACROSS APRON AT INCREMENTS NO GREATER THAN 12'6". ADDITIONAL EXPANSION JOINTS SHALL BE USED IF APRON IS POURED IN SEPARATE POURS. FOR DRIVE APRONS EXCEEDING 25' WIDE, EXPANSION JOINTS SHALL BE EVENLY SPACED ACROSS APRON AT INCREMENTS NO GREATER THAN 25'. RESIDENTIAL DRIVE APRONS EXCEEDING 24' WIDE MUST BE APPROVED BY CITY ENGINEER.

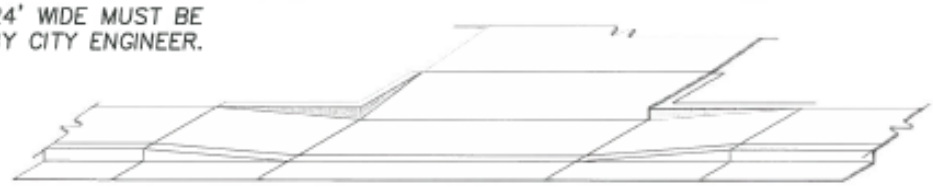

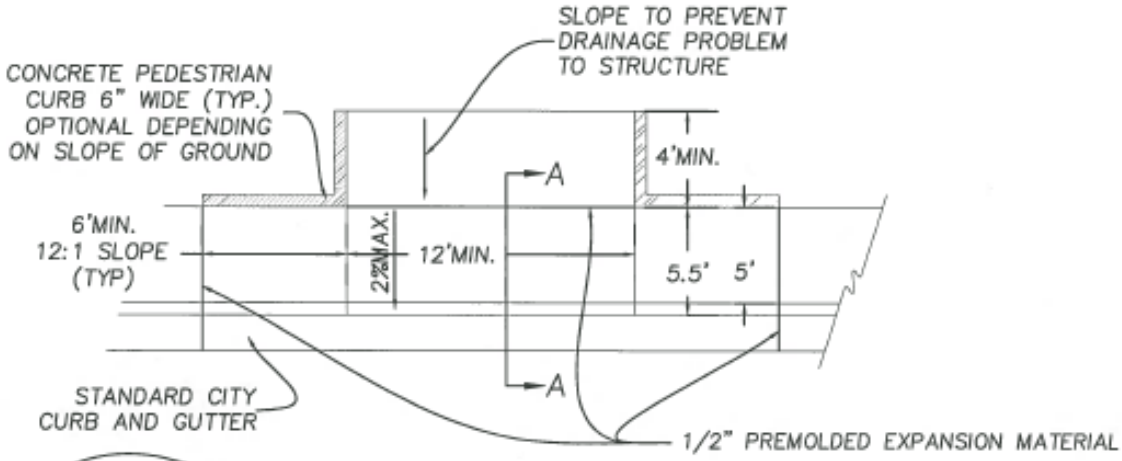

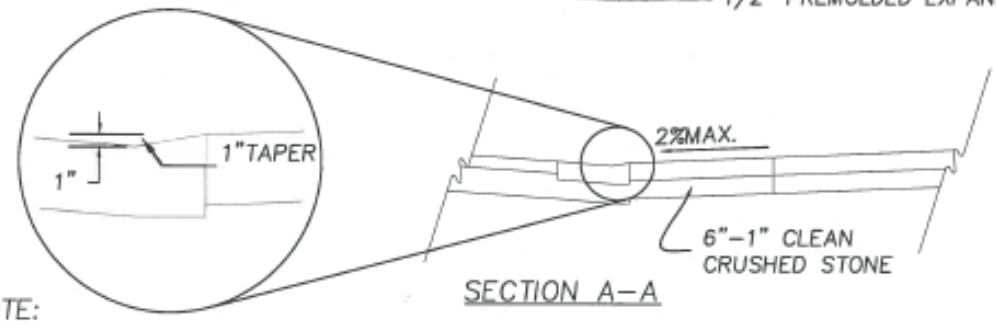

SECTION A-A

NOTE:

WHEN INSTALLING A NEW CONCRETE DRIVE AT EXISTING CONCRETE CURB AND GUTTER, THE ENTIRE CURB AND GUTTER SECTION IN THE AREA OF THE NEW DRIVE MUST BE REMOVED BY EITHER SAWCUTTING OR REMOVING TO AN EXISTING JOINT.

CONCRETE SHALL BE 6 BAG MIX (4,000 PSI) WITH SLUMP TEST LIMIT OF NOT LESS THAN 2 INCHES NOR MORE THAN 4 INCHES.

AN EXCAVATION PERMIT IS REQUIRED TO DIG IN PUBLIC RIGHT OF WAY. PERMIT SHALL BE OBTAINED FROM THE CITY OF ROLLA COMMUNITY DEVELOPMENT DEPARTMENT AT (573) 364-5333. AN INSPECTION IS REQUIRED BEFORE POURING ANY CONCRETE IN PUBLIC RIGHT OF WAY. CONTACT THE CITY OF ROLLA PUBLIC WORKS DEPARTMENT AT (573) 364-8659 FOR INSPECTION.

PDF FILE AVAILABLE AT www.rollacity.org/pubworks/drawings.shtm

ROLLA	CITY OF ROLLA DEPARTMENT OF PUBLIC WORKS			
APPROVED: NUMBER E-21918 DIRECTOR OF PUBLIC WORKS	DATE 4/4/18	REVISED: 04/30/2018	ADA COMPLIANT FLAT DRIVEWAY STANDARD	STANDARD 213

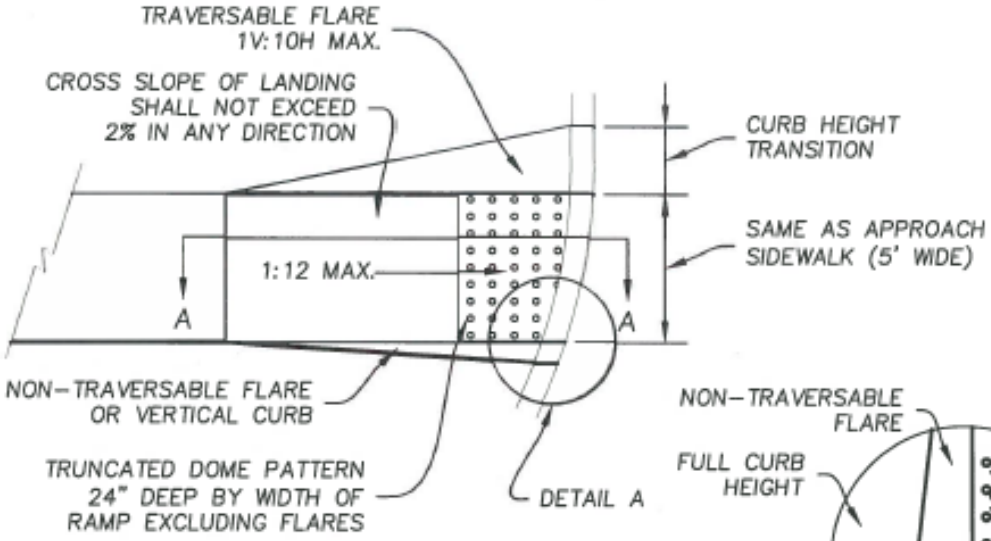

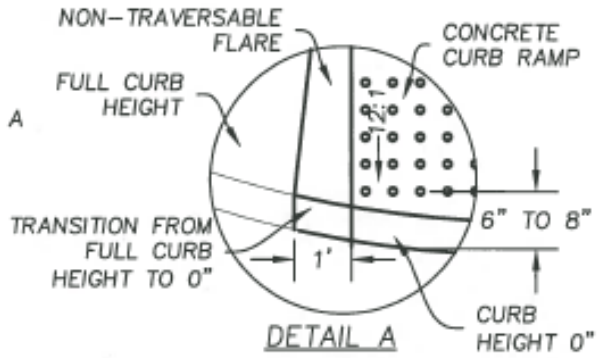

DETAIL A

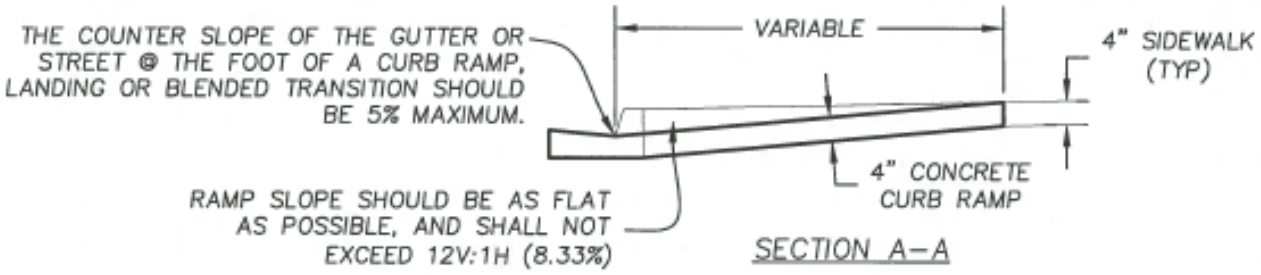

SECTION A–A

WHEN IT IS TECHNICALLY NOT FEASIBLE TO CONSTRUCT 1V:12H RAMP SLOPE, WHILE ALTERING EXISTING PEDESTRIAN FACILITIES, A SLOPE BETWEEN 1V:12H AND 1V:10H IS PERMISSIBLE FOR A MAXIMUM RISE OF 6", AND A SLOPE BETWEEN 1V:10H AND 1V:8H IS PERMISSIBLE FOR A MAXIMUM RISE OF 3".

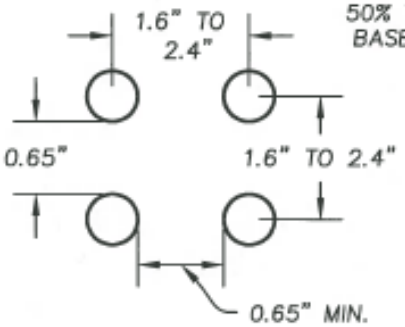

SPACING

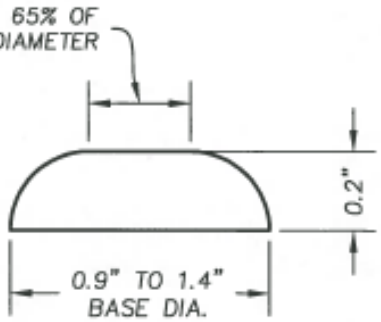

CROSS SECTION

ALL DOMES WITHIN CITY R.O.W. MUST BE BARE CAST IRON WET SET.

PDF FILE AVAILABLE AT www.rollacity.org/pubworks/drawings.shtm

ROLLA		CITY OF ROLLA DEPARTMENT OF PUBLIC WORKS		
APPROVED: E-21918	5/1/13	REVISED: 04/30/2018	TRUNCATED DOME STANDARD	STANDARD 251
DIRECTOR OF PUBLIC WORKS	DATE			

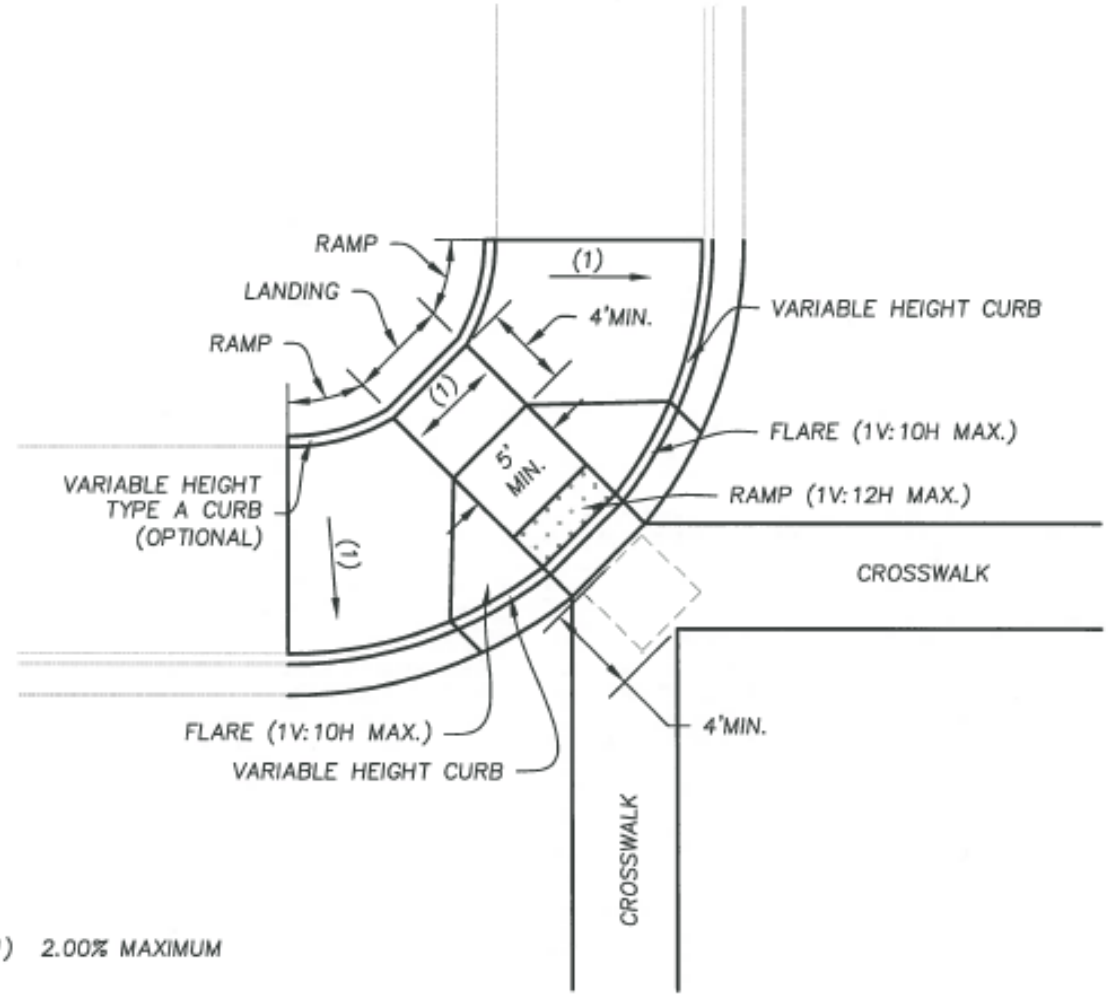

(1) 2.00% MAXIMUM

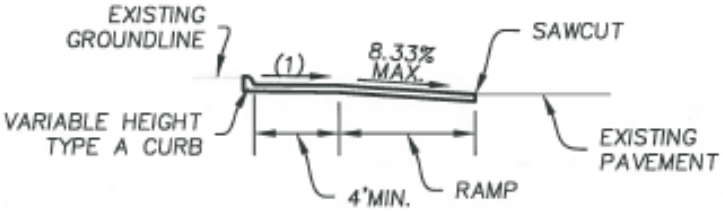

PDF FILE AVAILABLE AT www.rollacity.org/pubworks/drawings.shtm

ROLLA	CITY OF ROLLA DEPARTMENT OF PUBLIC WORKS			
APPROVED: NUMBER E-21918	5/1/13	REVISED:	COMPOUND DIAGONAL HANDICAP RAMP – OPTION A STANDARD	STANDARD 252
DIRECTOR OF PUBLIC WORKS	DATE			

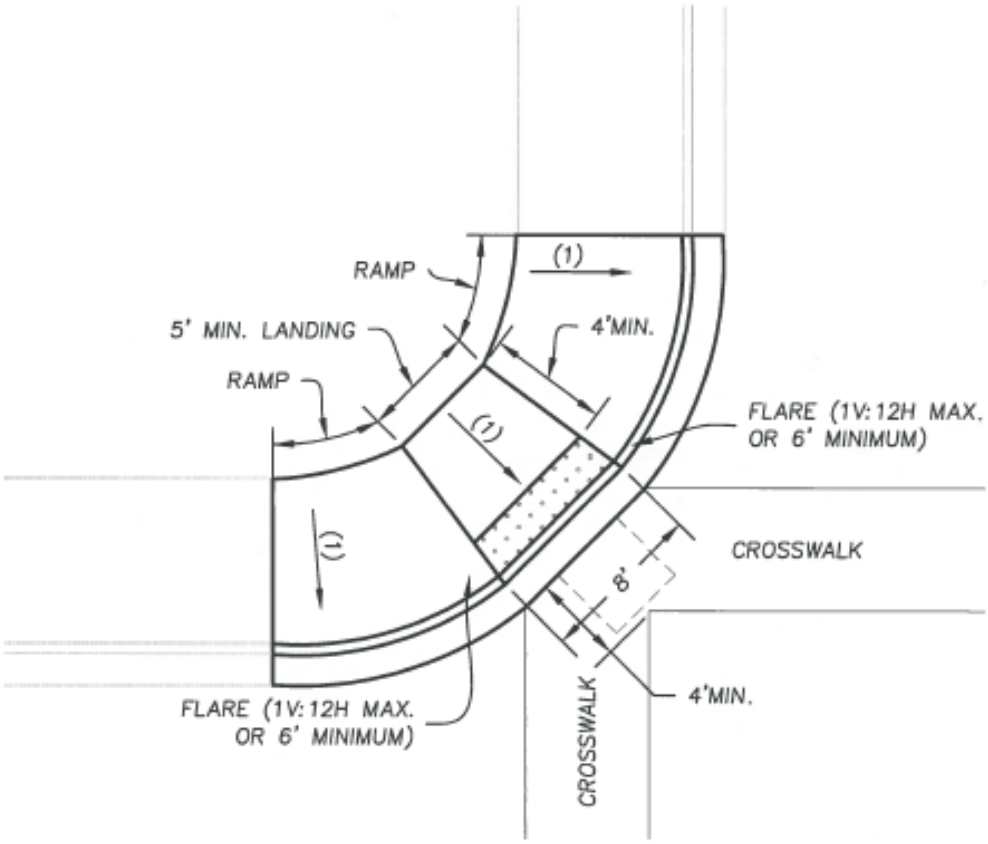

(1) 2.00% MAXIMUM

PDF FILE AVAILABLE AT www.rollacity.org/pubworks/drawings.shtm

ROLLA	CITY OF ROLLA DEPARTMENT OF PUBLIC WORKS			
APPROVED:	5/1/18	REVISED:	COMPOUND DIAGONAL HANDICAP RAMP – OPTION B STANDARD	STANDARD 253
DIRECTOR OF PUBLIC WORKS	DATE			

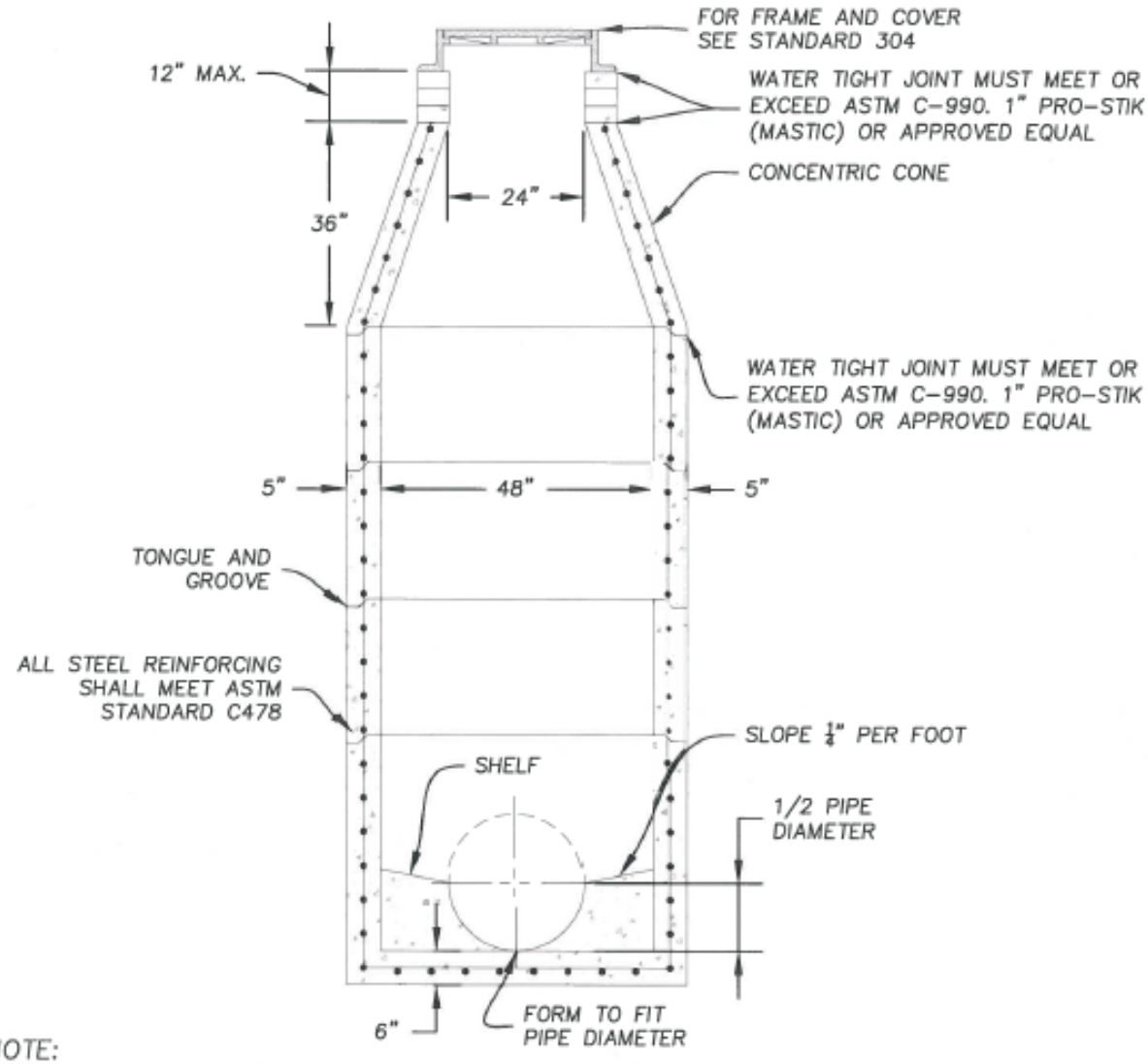

NOTE:

SEWER LATERALS TO BE INSTALLED IN MANHOLES ONLY IF PRE APPROVAL GIVEN BY CITY ENGINEER. A-LOCKS MUST BE PRECAST IN MANHOLE TO ALLOW 4" SCHEDULE 40 INSTALLATION AT SHELF ELEVATION.

BASE SHALL BE PLACED ON LEVEL COMPACTED OR UNDISTURBED SOIL. COMPACTION SHALL BE BY MECHANICAL TAMPER.

ENTIRE EXTERIOR SURFACE OF MANHOLE SHALL BE WATERPROOFED BEFORE BACKFILLING IS COMMENCED (SEE SPECIFICATIONS).

FOR ALTERNATE POURED IN PLACE MANHOLE BASE, SEE STANDARD 302.

PDF FILE AVAILABLE AT www.rollacity.org/pubworks/drawings.shtm

ROLLA	CITY OF ROLLA DEPARTMENT OF PUBLIC WORKS			
APPROVED: DIRECTOR OF PUBLIC WORKS	DATE 5/1/18	REVISED: 04/30/2018	PRECAST CONCRETE MANHOLE WITH PRECAST BASE	STANDARD 301

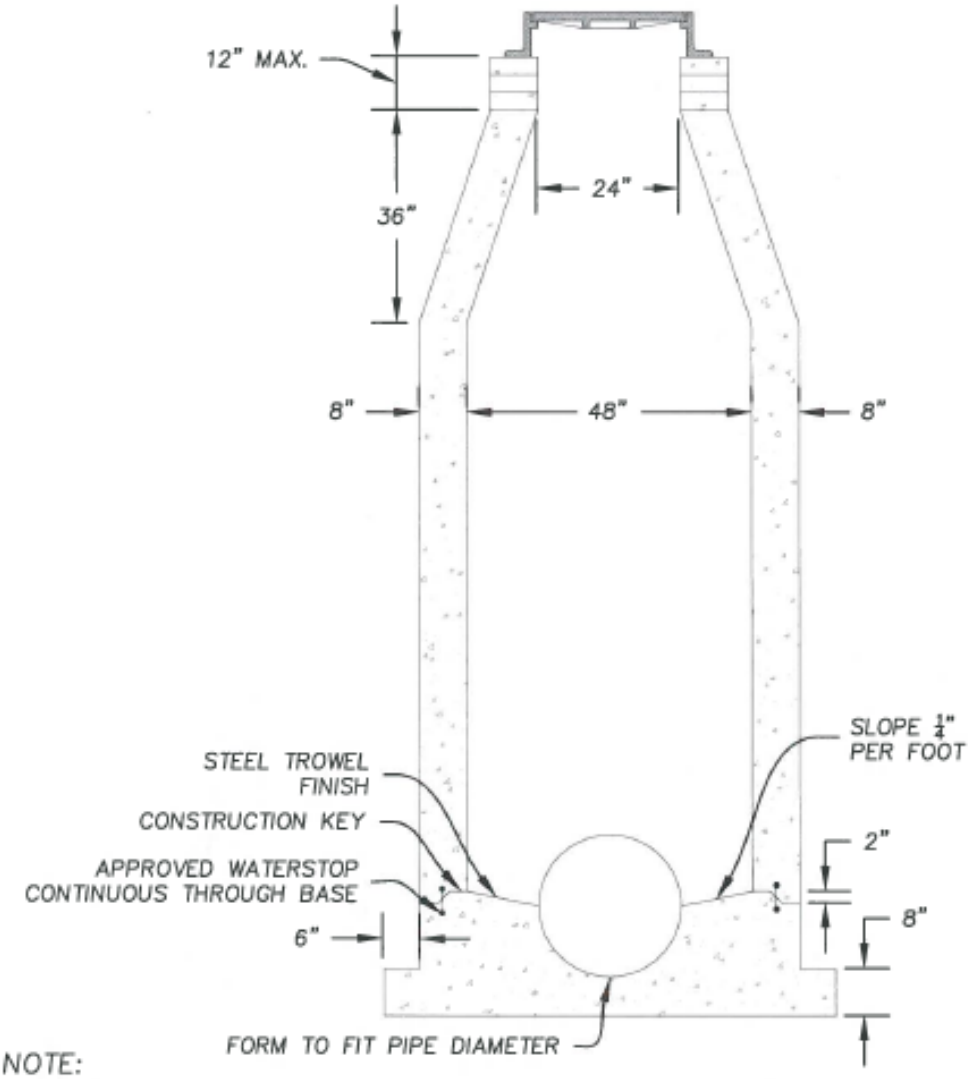

NOTE:

MANHOLE SHALL BE RAISED 18 INCHES FROM NATURAL GROUND TO FRAME AND COVER WHEN LOCATED OUTSIDE OF IMPROVED AREA.

SEWER LATERALS TO BE INSTALLED IN MANHOLES ONLY IF PREAPPROVAL GIVEN BY CITY ENGINEER. A-LOCKS MUST BE PRECAST IN MANHOLE TO ALLOW 4" SCHEDULE 40 INSTALLATION AT SHELF ELEVATION.

BASE SHALL BE PLACED ON LEVEL COMPACTED OR UNDISTURBED SOIL. COMPACTION SHALL BE BY MECHANICAL TAMPER.

ENTIRE EXTERIOR SURFACE OF MANHOLE SHALL BE WATERPROOFED BEFORE BACKFILLING IS COMMENCED (SEE SPECIFICATIONS).

FORMS SHALL BE USED WHEN CONSTRUCTING THE BASE.

PDF FILE AVAILABLE AT www.rollacity.org/pubworks/drawings.shtm

ROLLA	CITY OF ROLLA DEPARTMENT OF PUBLIC WORKS			
APPROVED: NUMBER E-21918	3/1/13	REVISED:	POURED IN PLACE CONCRETE MANHOLE	STANDARD 302
DIRECTOR OF PUBLIC WORKS	DATE			

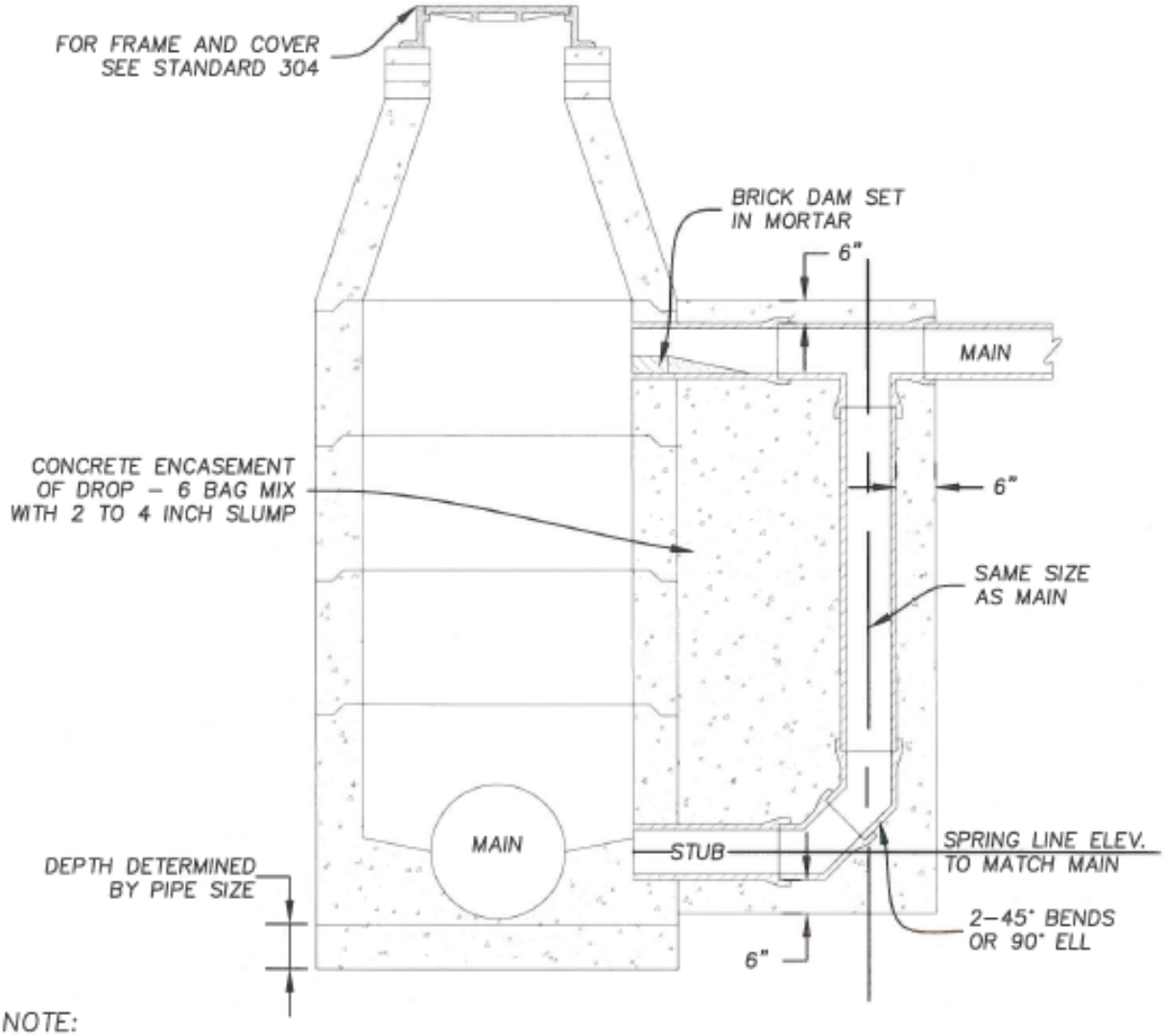

NOTE:

DROP MANHOLE SHALL BE REQUIRED WHEN DIFFERENCE IN ELEVATION OF INVERTS OF TWO INTERSECTING CONDUITS IS GREATER THAN 24 INCHES.

MAXIMUM PIPE SIZE SHALL BE 36 INCHES.

BASE SHALL BE PLACED ON LEVEL COMPACTED OR UNDISTURBED SOIL. COMPACTION SHALL BE BY MECHANICAL TAMPER.

ENTIRE EXTERIOR SURFACE OF MANHOLE SHALL BE WATERPROOFED BEFORE BACKFILLING IS COMMENCED (SEE SPECIFICATIONS).

SEE MANHOLE STANDARD 301 FOR MANHOLE DETAILS.

PDF FILE AVAILABLE AT www.rollacity.org/pubworks/drawings.shtm

ROLLA	CITY OF ROLLA DEPARTMENT OF PUBLIC WORKS			
APPROVED: NUMBER E-21918 / DIRECTOR OF PUBLIC WORKS	DATE 5/1/18	REVISED:	DROP MANHOLE	STANDARD 303

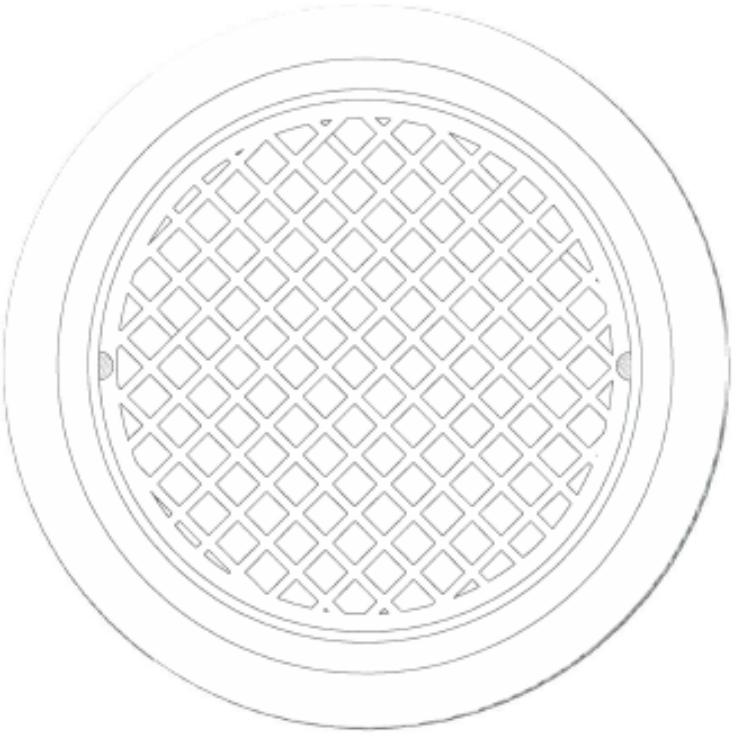

PLAN

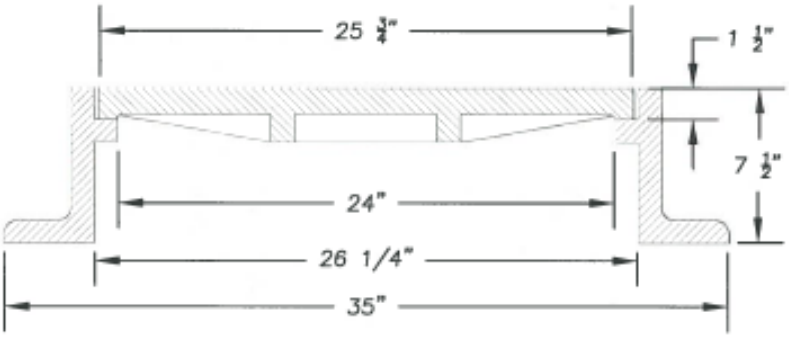

SECTION

NOTE:

MANHOLE FRAME AND COVER SHALL BE "NEENAH FOUNDRY CO." R-1642, R-1643, EJIW 1045Z FRAME & 1040A COVER OR APPROVED EQUAL.

PDF FILE AVAILABLE AT www.rollacity.org/pubworks/drawings.shtm

ROLLA	CITY OF ROLLA DEPARTMENT OF PUBLIC WORKS			
APPROVED: DIRECTOR OF PUBLIC WORKS	5/1/18 DATE	REVISED: 04/30/2018	MANHOLE FRAME AND COVER	STANDARD 304

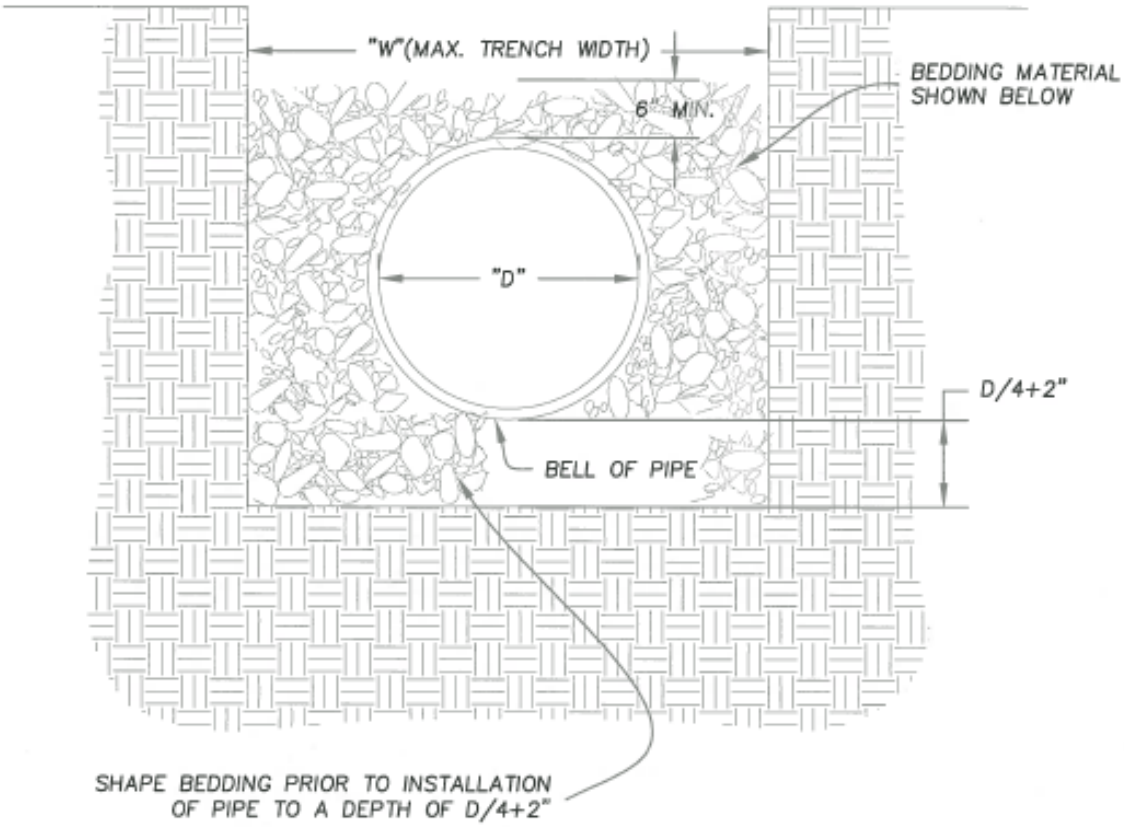

MAXIMUM TRENCH WIDTH	
SEWER SIZE "D"	MAXIMUM TRENCH WIDTH "W"
8"	24"
10"	24"
12"	30"
15"	30"
18"	36"
21"	42"
24"	48"

CRUSHED LIMESTONE BEDDING		
GRADATION IN PERCENTAGES BY WEIGHT PASSING SQUARE MESH SCREENS		
SCREEN SIZE	% PASSING	RETAINED
1"	100%	–
3/4"	95%	–
NO. 4	–	95%

PDF FILE AVAILABLE AT www.rollacity.org/pubworks/drawings.shtm

ROLLA

CITY OF ROLLA DEPARTMENT OF PUBLIC WORKS

APPROVED:	REVISED:	BEDDING DETAIL	STANDARD 305
DIRECTOR OF PUBLIC WORKS DATE 5/1/18			

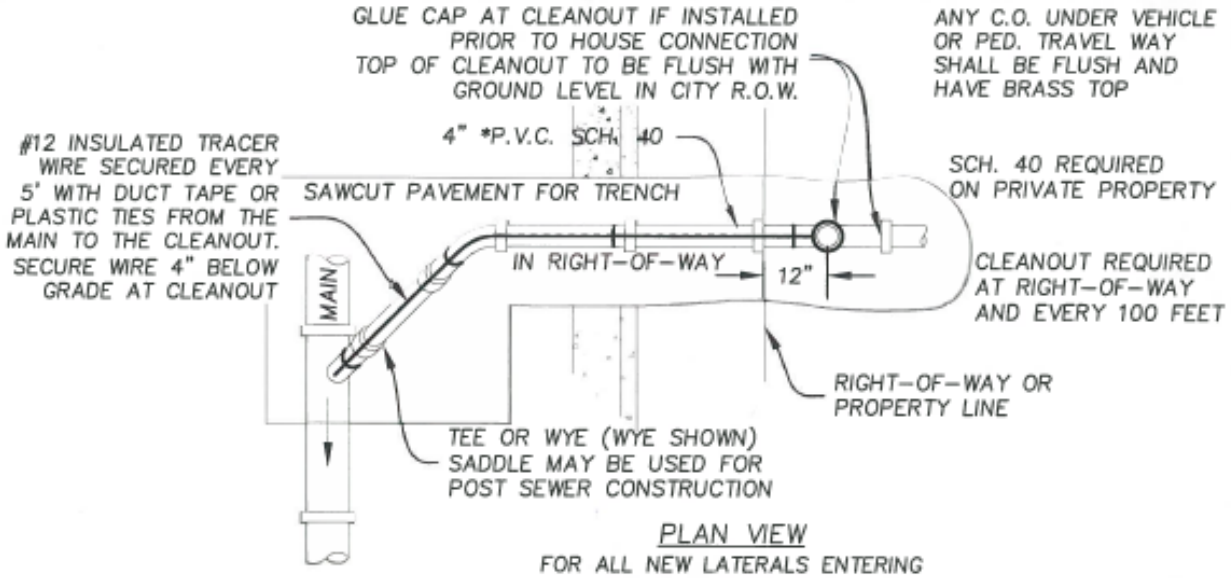

PLAN VIEW

FOR ALL NEW LATERALS ENTERING STREET RIGHT-OF-WAY

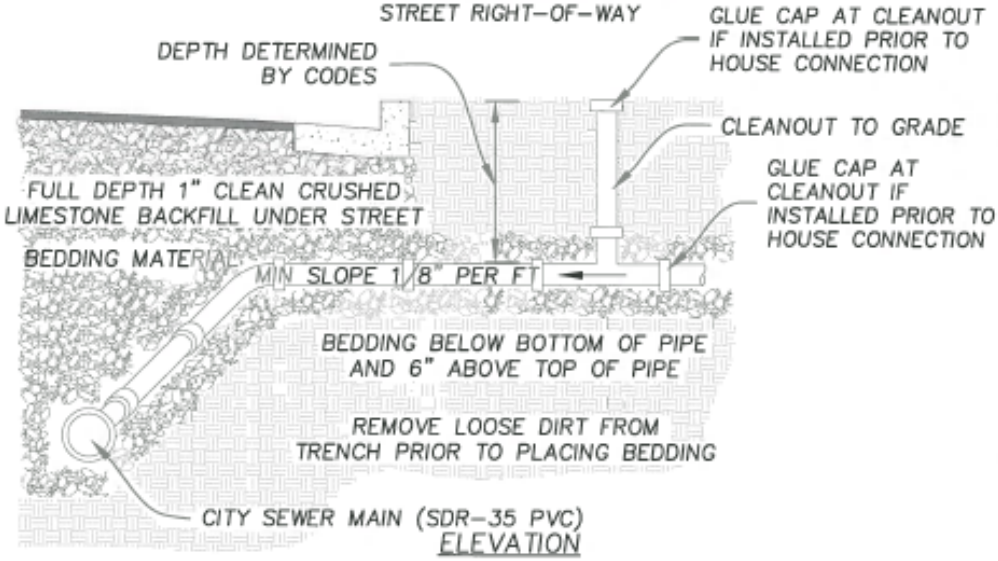

ELEVATION

NOTE:

SEWER LATERAL TAP MUST BE INSPECTED BY CITY BEFORE BACKFILLING ON BOTH PRIVATE PROPERTY AND PUBLIC RIGHT-OF-WAY

SEWER LINE MUST BE EXCAVATED AS SHOWN ABOVE.

FOR BEDDING DETAIL, SEE STANDARD DRAWING 305.

*P.V.C. – POLYVINYL CHLORIDE

PVC SEWER LATERALS
6" AND ABOVE = SDR 35 (SLOPE 1/8" PER 1' OR 1%)
4" AND UNDER = SCH 40 (SLOPE 1/4" PER 1' OR 2%)

PDF FILE AVAILABLE AT www.rollacity.org/pubworks/drawings.shtm

ROLLA	CITY OF ROLLA DEPARTMENT OF PUBLIC WORKS			
APPROVED: NUMBER E-21918	5/1/18	REVISED: 08-10-05 04-30-18	PRIVATE SEWER LATERAL STANDARDS	STANDARD 306
DIRECTOR OF PUBLIC WORKS	DATE			

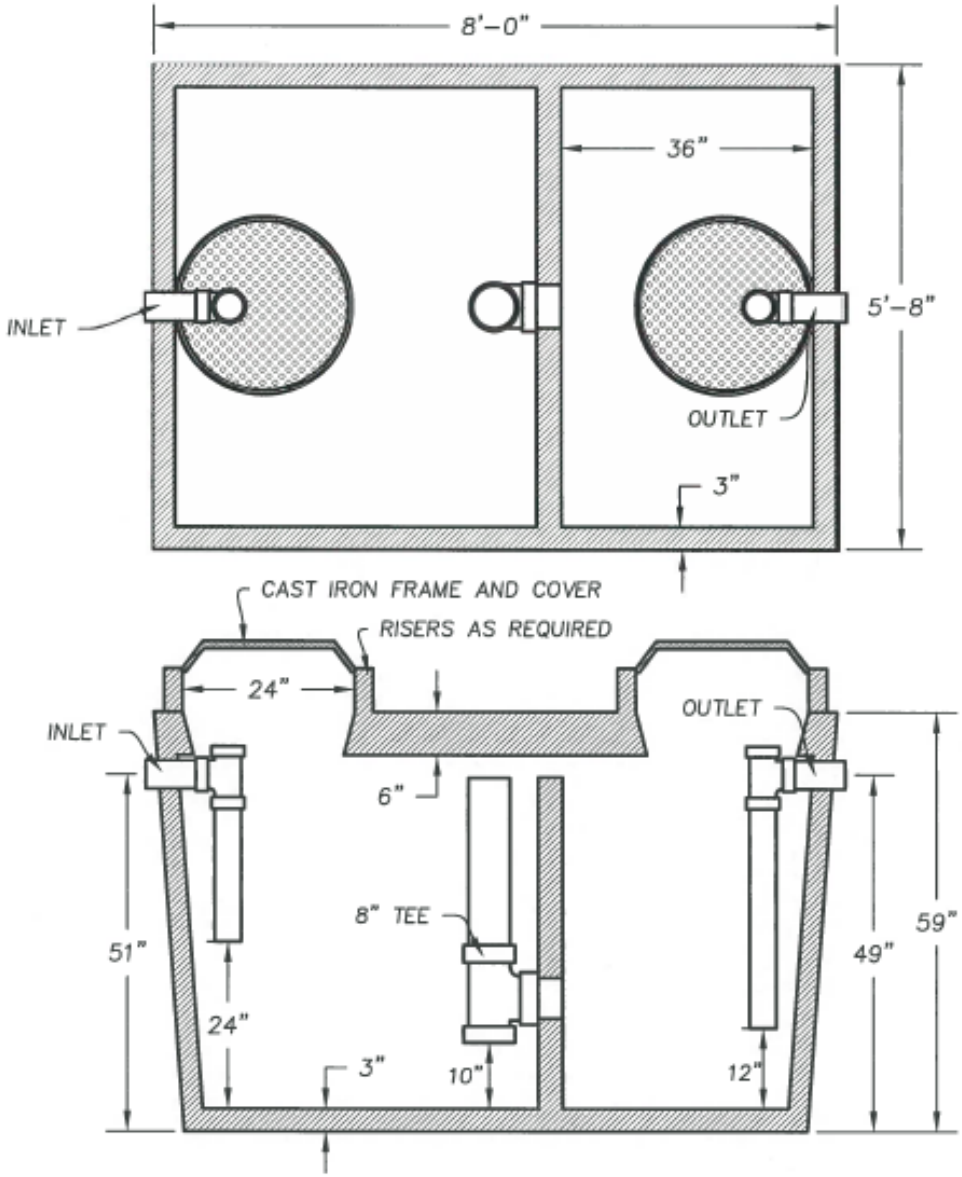

REINFORCEMENT:
TOP – 6x6x10x10 WWF, #4 REBAR 12" O.C. EW
SIDES – #4 BAR 12" DOWN, 12" AROUND CORNER, #4 BAR VERTICAL 12" O.C.
BOTTOM – 6x6x10x10 WWF, #3 BAR 12" O.C., L BARS 12" INTO WALL

PDF FILE AVAILABLE AT www.rollacity.org/pubworks/drawings.shtm

ROLLA	CITY OF ROLLA DEPARTMENT OF PUBLIC WORKS			
APPROVED: E-21918	8/1/18	REVISED:	GREASE TRAP DETAIL	STANDARD 307
DIRECTOR OF PUBLIC WORKS	DATE			

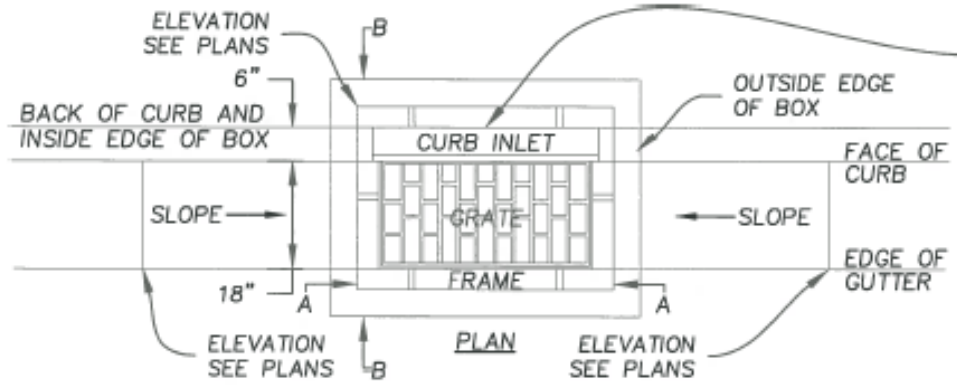

R3295 SINGLE–L R3295–2 DOUBLE–L R3295–3 TRIPLE–L
EJIW SINGLE–7030 W/VANE GRATE DOUBLE–7031 W/VANE GRATE TRIPLE–7031 & 7032 W/VANE GRATE OR APPROVED EQUAL

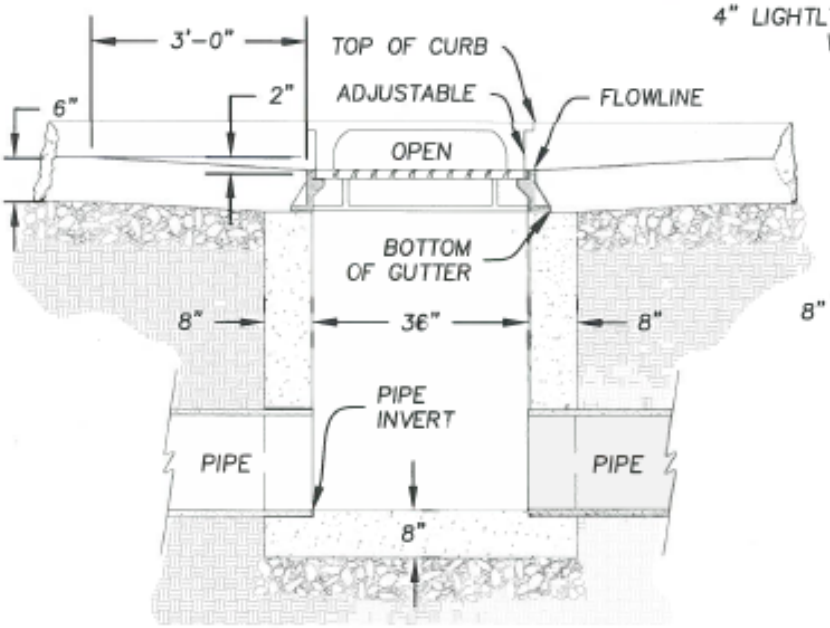

SECTION A–A

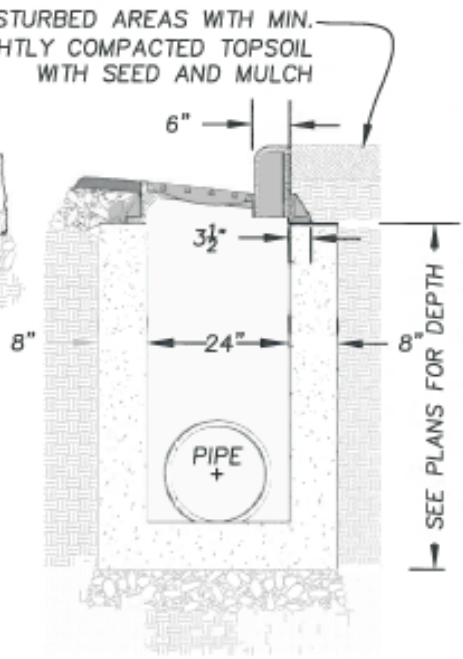

SECTION B–B

NOTES:

WALL CONSTRUCTION SHALL BE POURED IN PLACE CONCRETE, 8"Tx8"Hx16"L CONCRETE BLOCK GROUTED SOLID, OR PRECAST CONCRETE.

BASE CONSTRUCTION SHALL BE POURED IN PLACE CONCRETE FORMED TO DIMENSION SHOWN.

CONCRETE SHALL BE 6 BAG MIX (4,000 PSI) WITH MINIMUM SLUMP OF 1 INCH AND MAXIMUM SLUMP OF 4 INCHES.

PDF FILE AVAILABLE AT www.rollacity.org/pubworks/drawings.shtm

ROLLA	CITY OF ROLLA DEPARTMENT OF PUBLIC WORKS			
APPROVED: NUMBER E-21918 DIRECTOR OF PUBLIC WORKS	8/1/18 DATE	REVISED: 11–04–04 04–30–18	CATCH BASIN AND CURB INLET INSTALLATION DETAIL	STANDARD 401

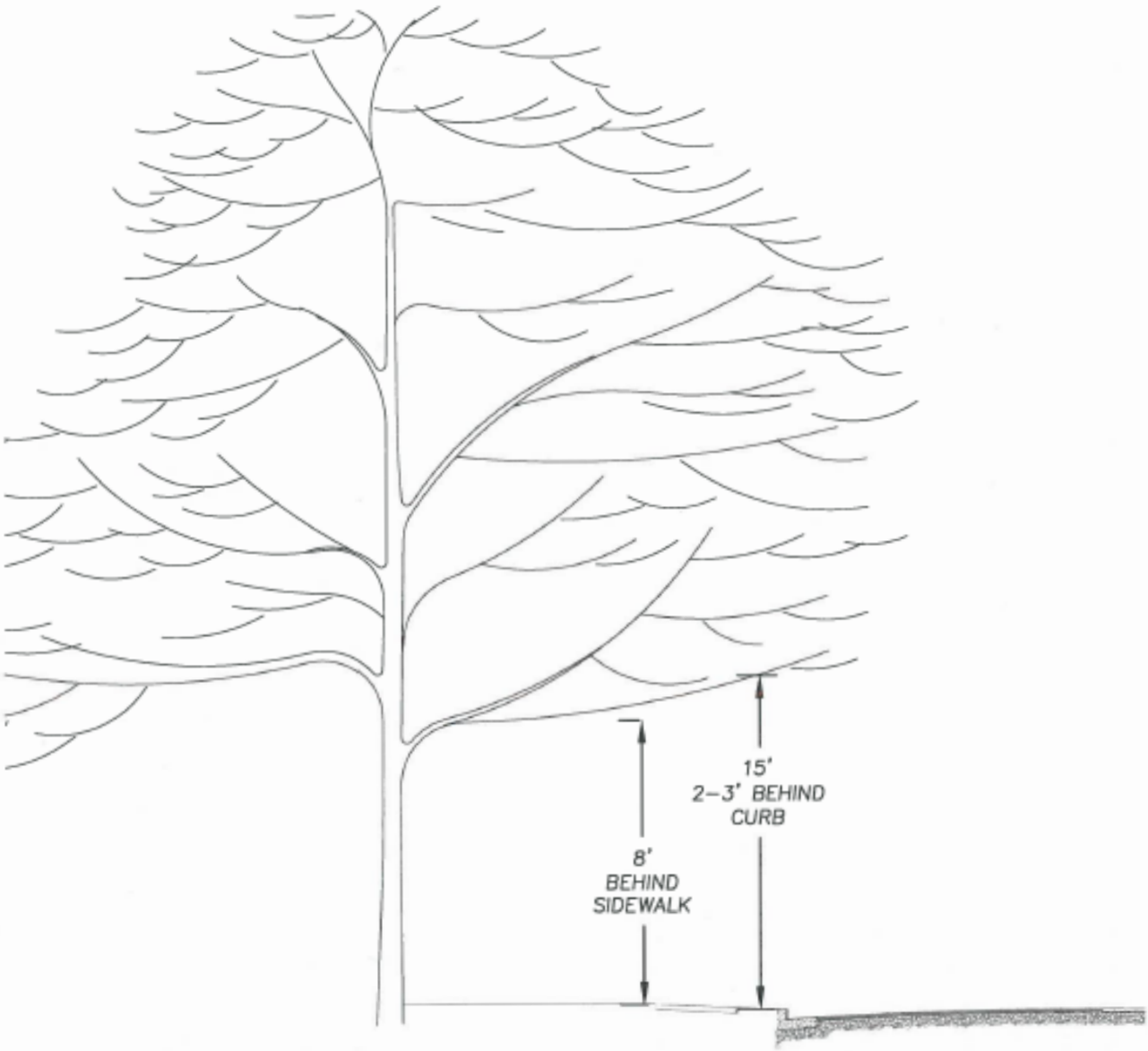

PDF FILE AVAILABLE AT www.rollacity.org/pubworks/drawings.shtm

ROLLA	CITY OF ROLLA DEPARTMENT OF PUBLIC WORKS		
APPROVED: DIRECTOR OF PUBLIC WORKS DATE	REVISED:	TREE TRIMMING DETAIL	STANDARD 501